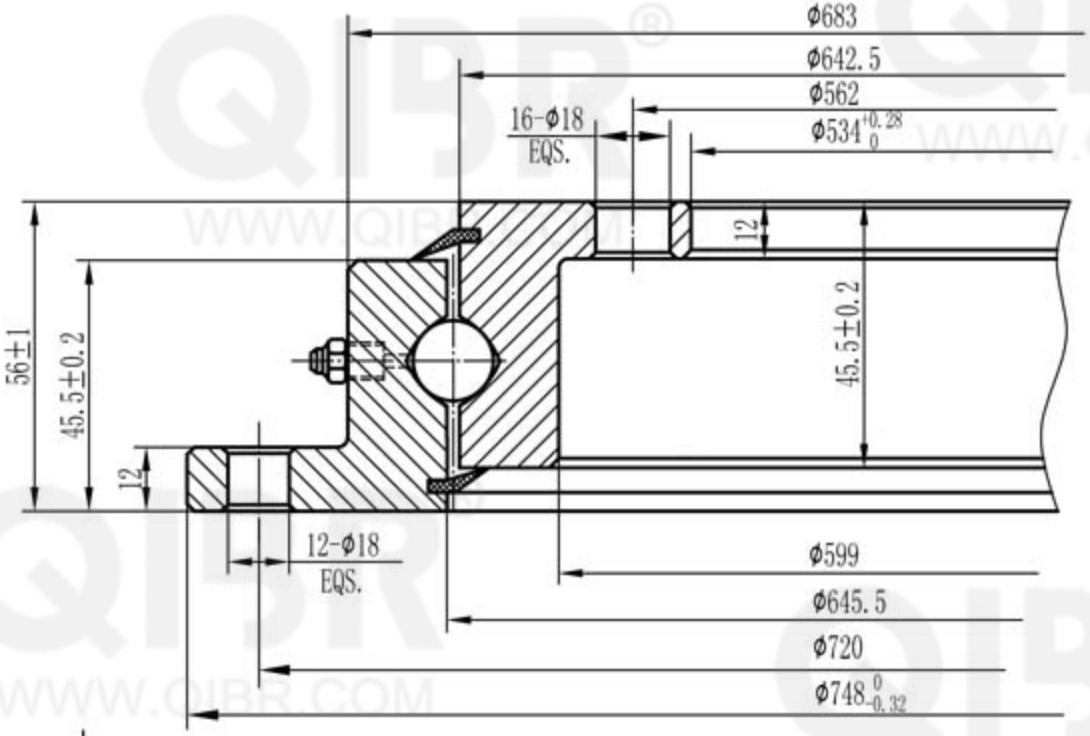

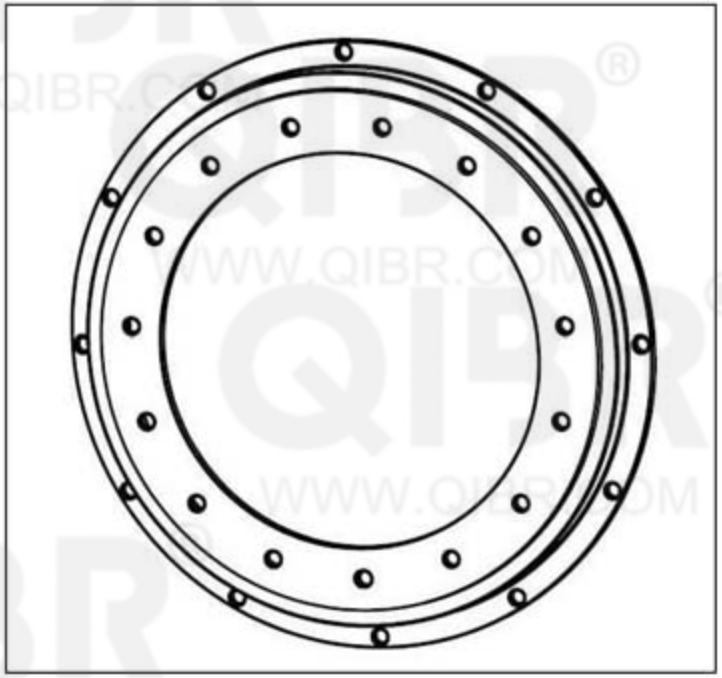

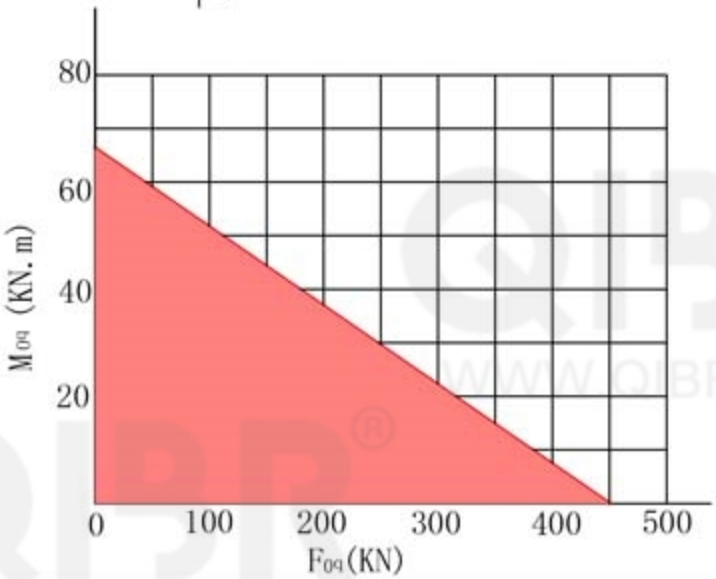

QIBR® BEARINGS

LUOYANG QIBR BEARING CO., LTD
http://www.QIBR.com

FOUR-POINT CONTACT BALL SLEWING BEARING

PART NUMBER QNBL.20.0644.200-1PPN

QIBR® WWW.QIBR.COM