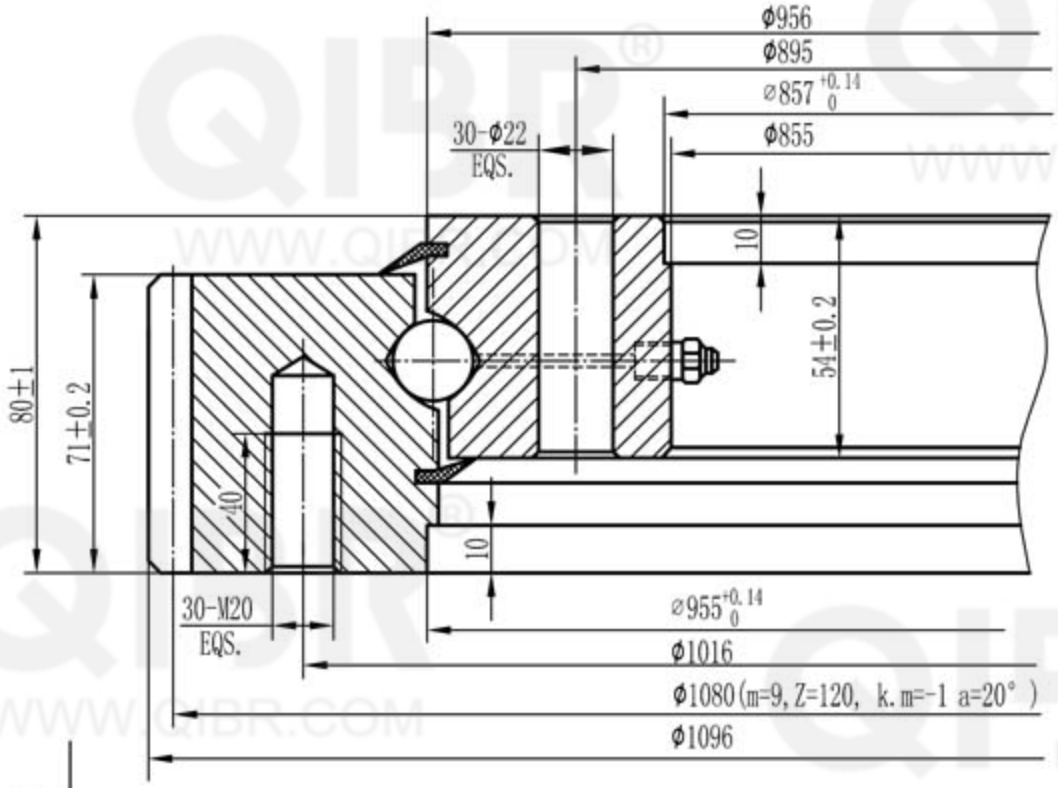

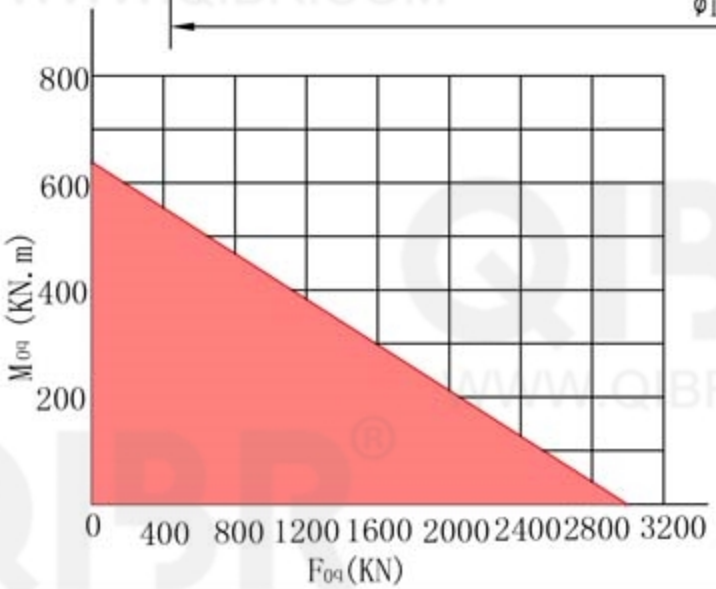

QIBR® BEARINGS LUOYANG QIBR BEARING CO., LTD
http://www.QIBR.com

FOUR-POINT CONTACT BALL SLEWING BEARING	PART NUMBER QEB1.25.0955.201-2STPN