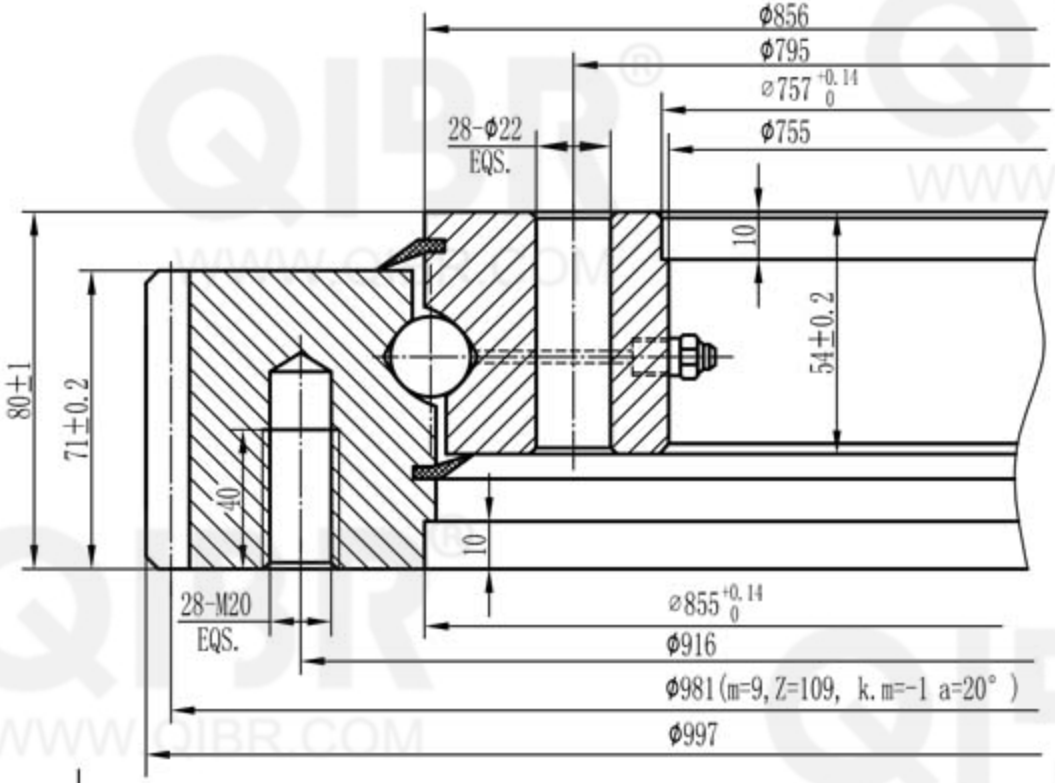

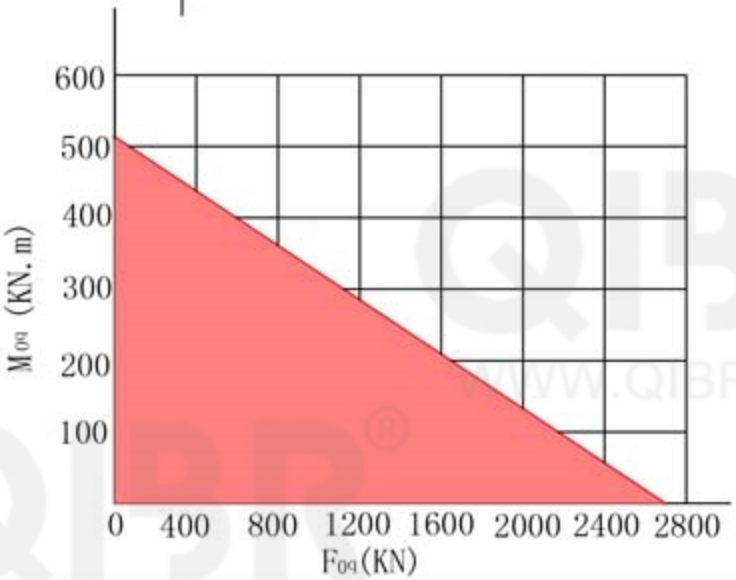

QIBR® BEARINGS

LUOYANG QIBR BEARING CO., LTD

http://www.QIBR.com

FOUR-POINT CONTACT BALL SLEWING BEARING

PART NUMBER QEB1.25.0855.201-2STPN