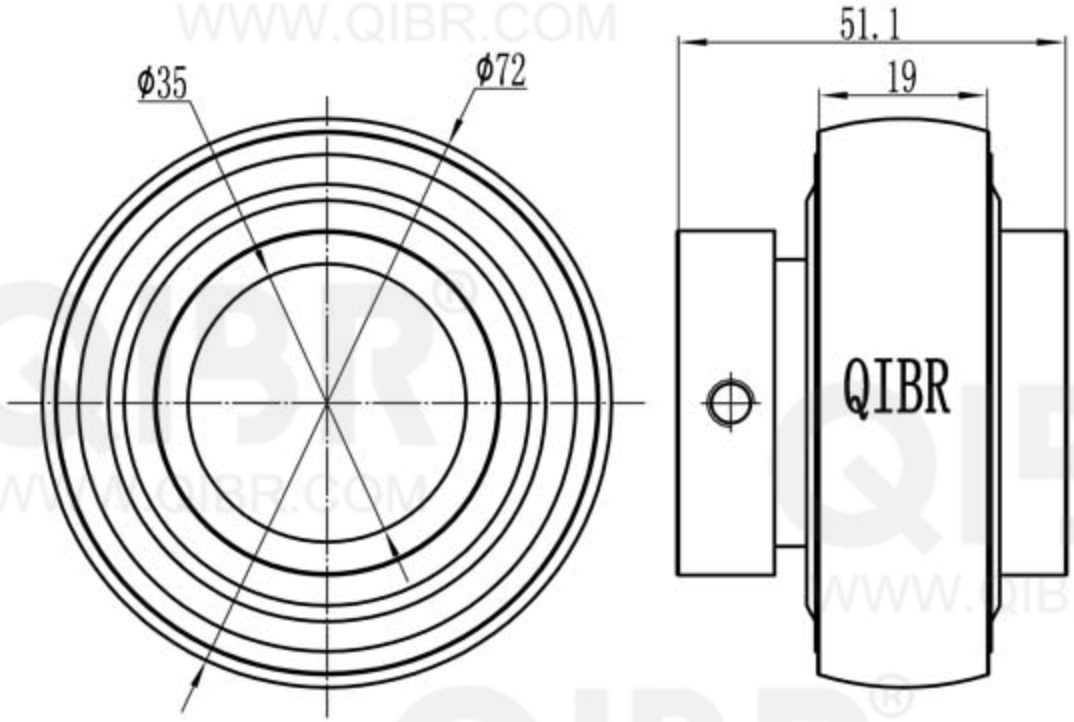

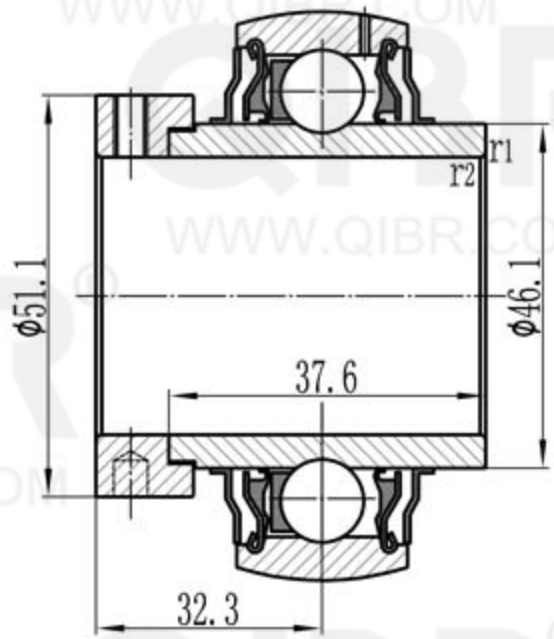

QIBR® BEARINGS	LUOYANG QIBR BEARING CO., LTD http://www.QIBR.com
INSERT BALL BEARING	PART NUMBER QYEL 207-2F

QIBR® WWW.QIBR.COM