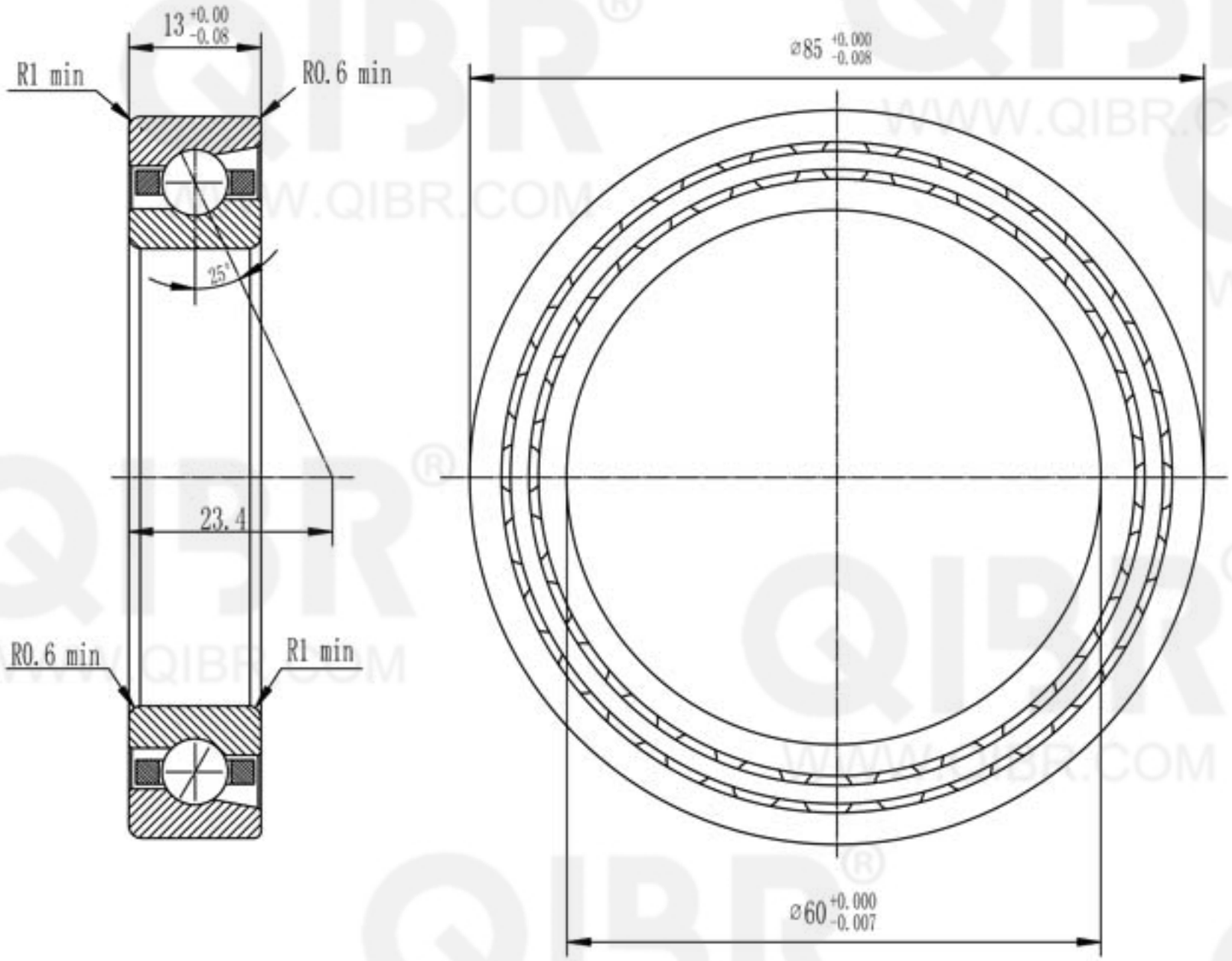

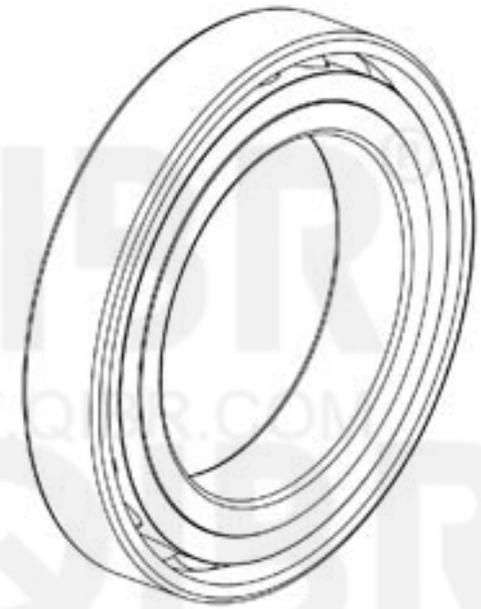

QIBR® BEARINGS

LUOYANG QIBR BEARING CO., LTD

http://www.QIBR.com

ANGULAR CONTACT BALL BEARING	PART NUMBER	Q60BER19X

QIBR® WWW.QIBR.COM