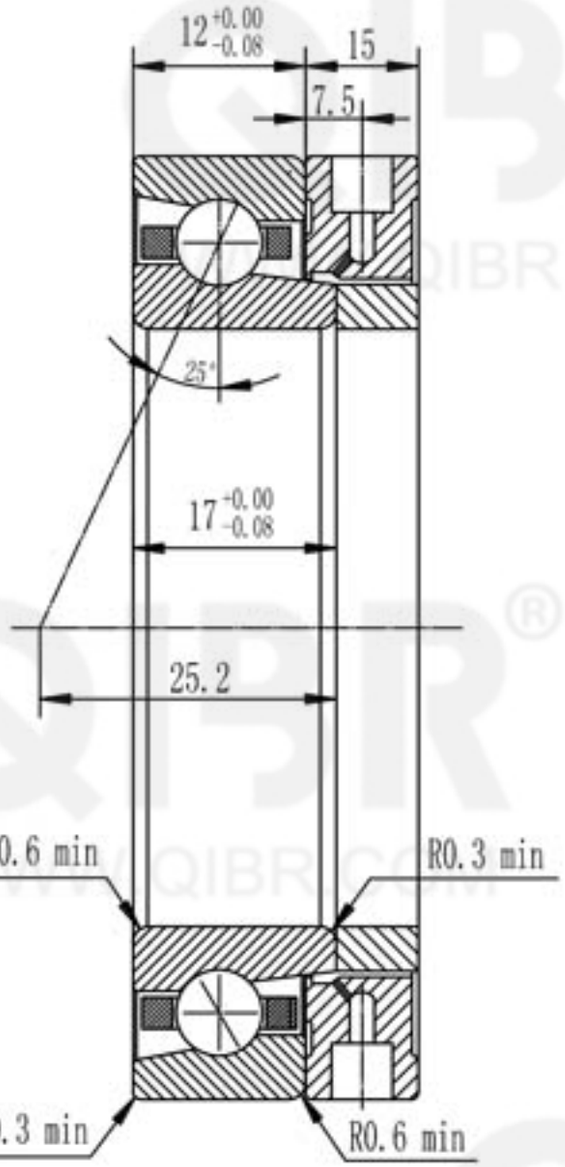

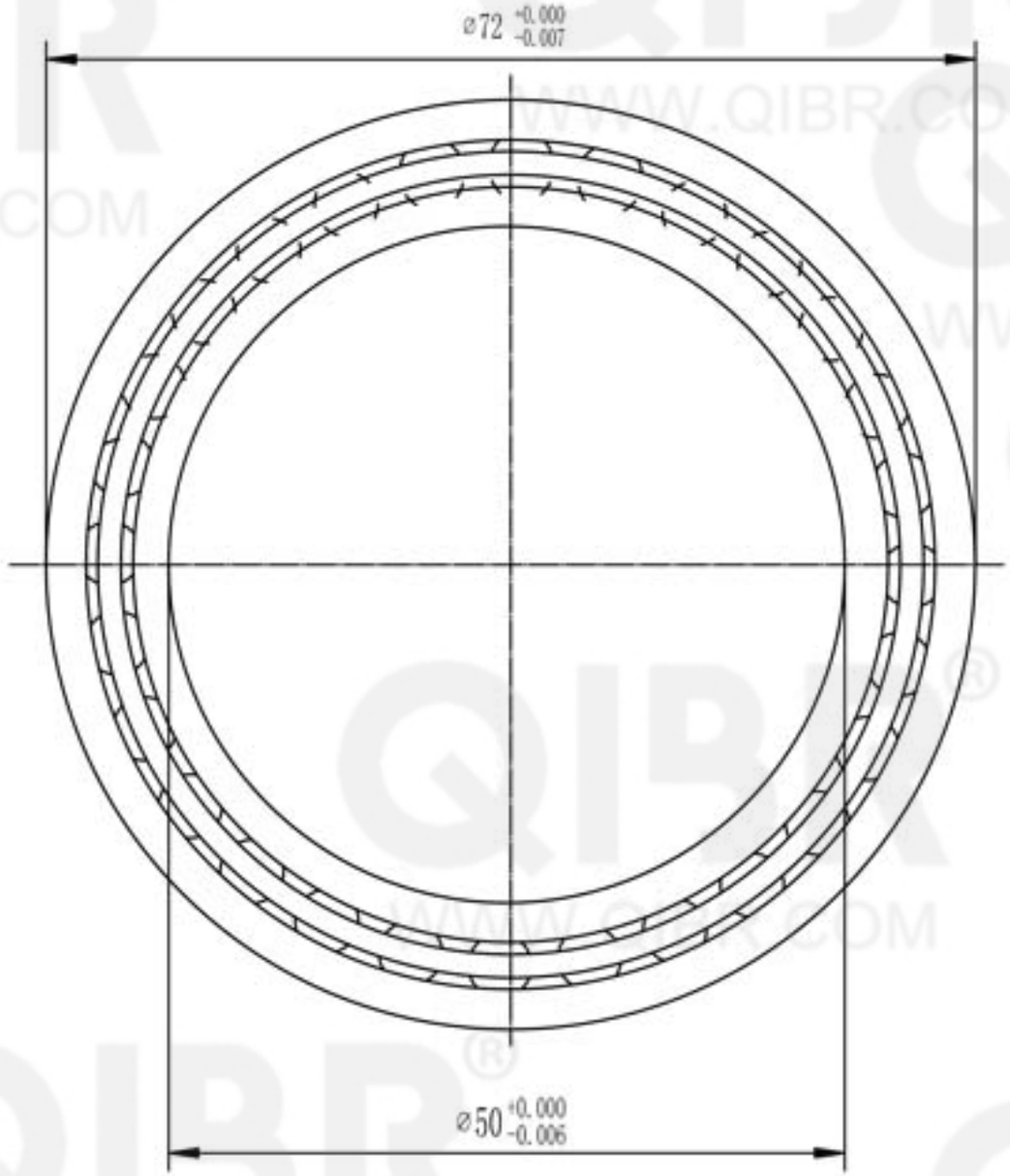

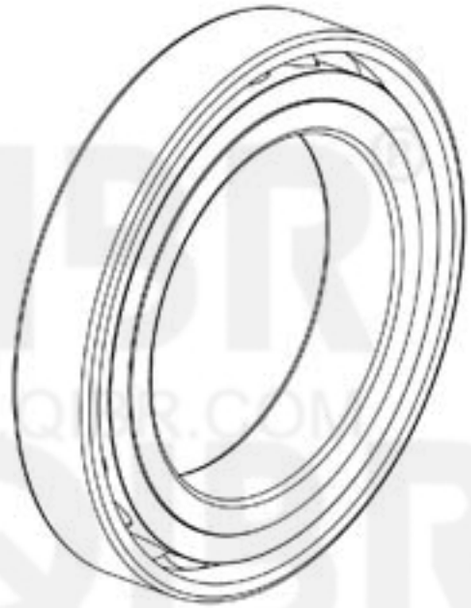

QIBR® BEARINGS	LUOYANG QIBR BEARING CO., LTD http://www.QIBR.com	
ANGULAR CONTACT BALL BEARING	PART NUMBER	Q50BER19XE

QIBR® WWW.QIBR.COM