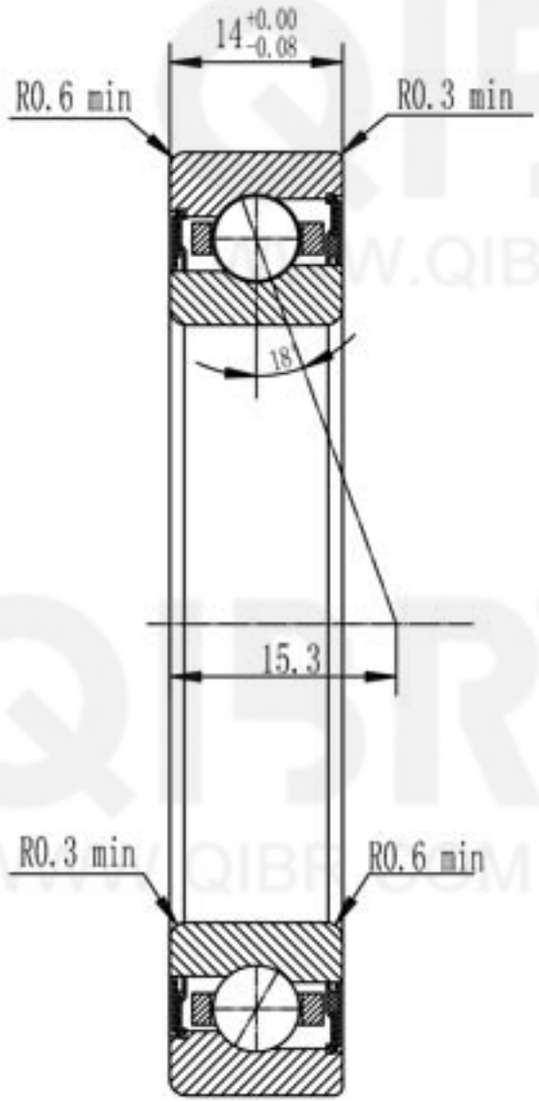

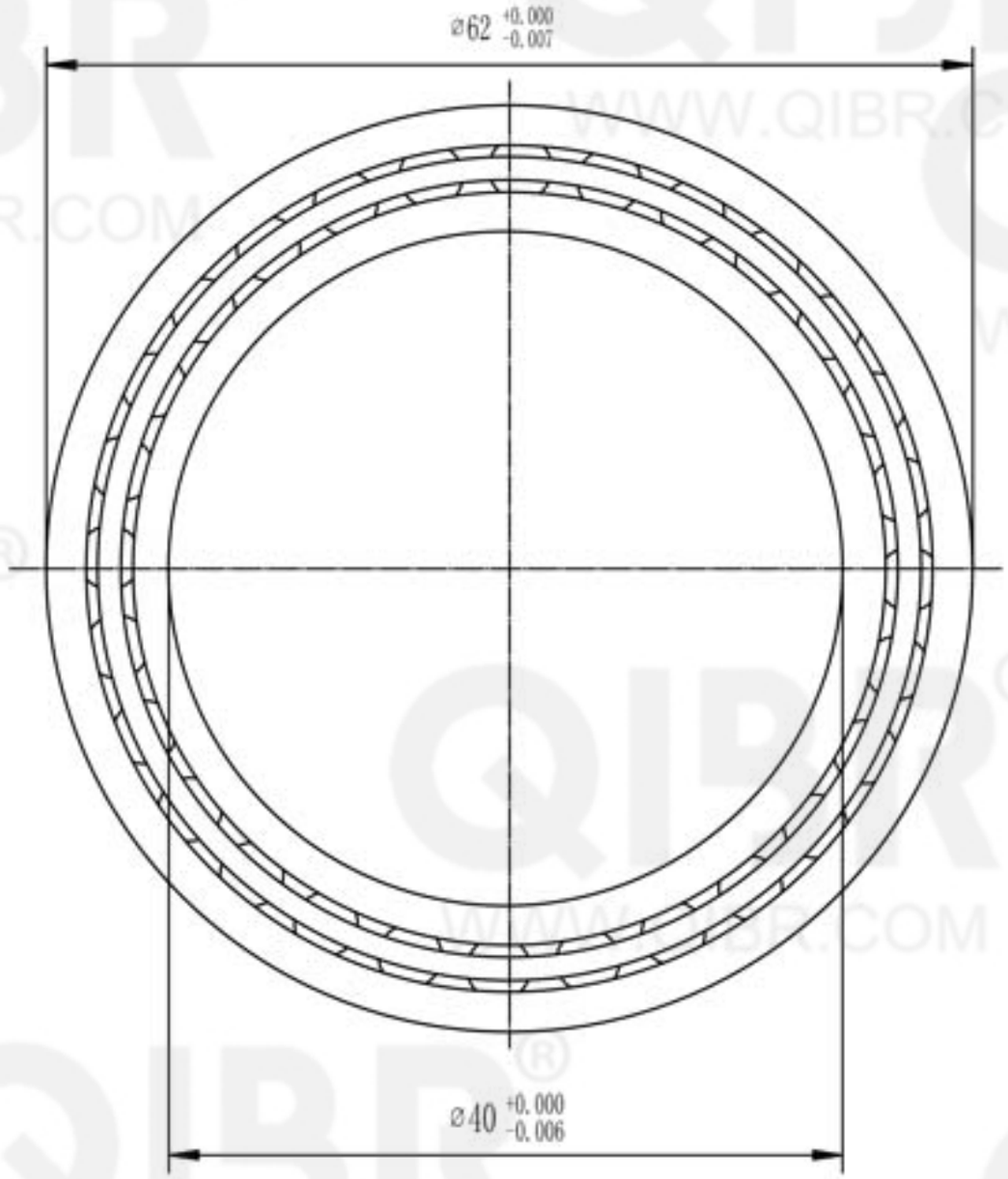

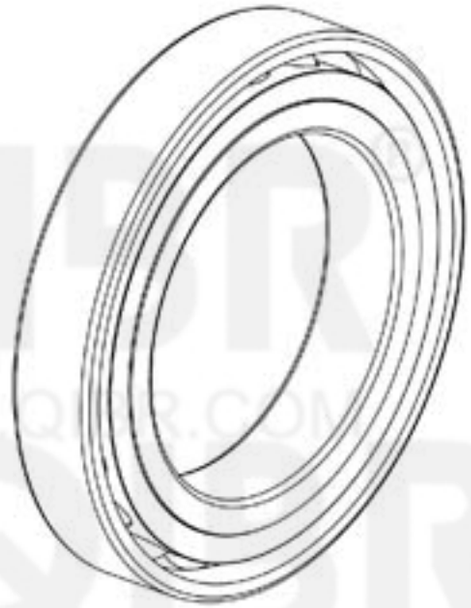

QIBR® BEARINGS

LUOYANG QIBR BEARING CO., LTD

http://www.QIBR.com

ANGULAR CONTACT BALL BEARING	PART NUMBER Q40BNR29XV1V

QIBR® WWW.QIBR.COM