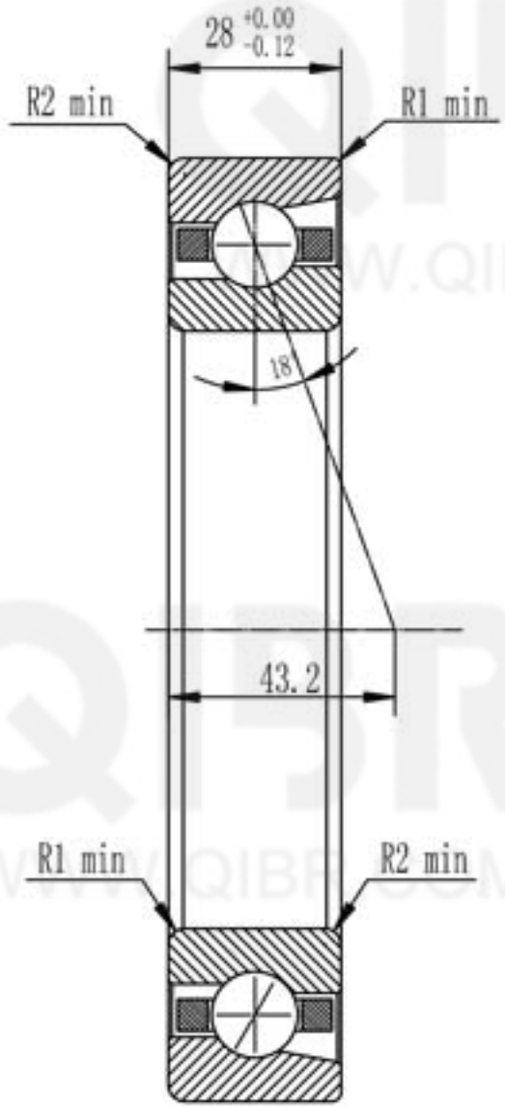


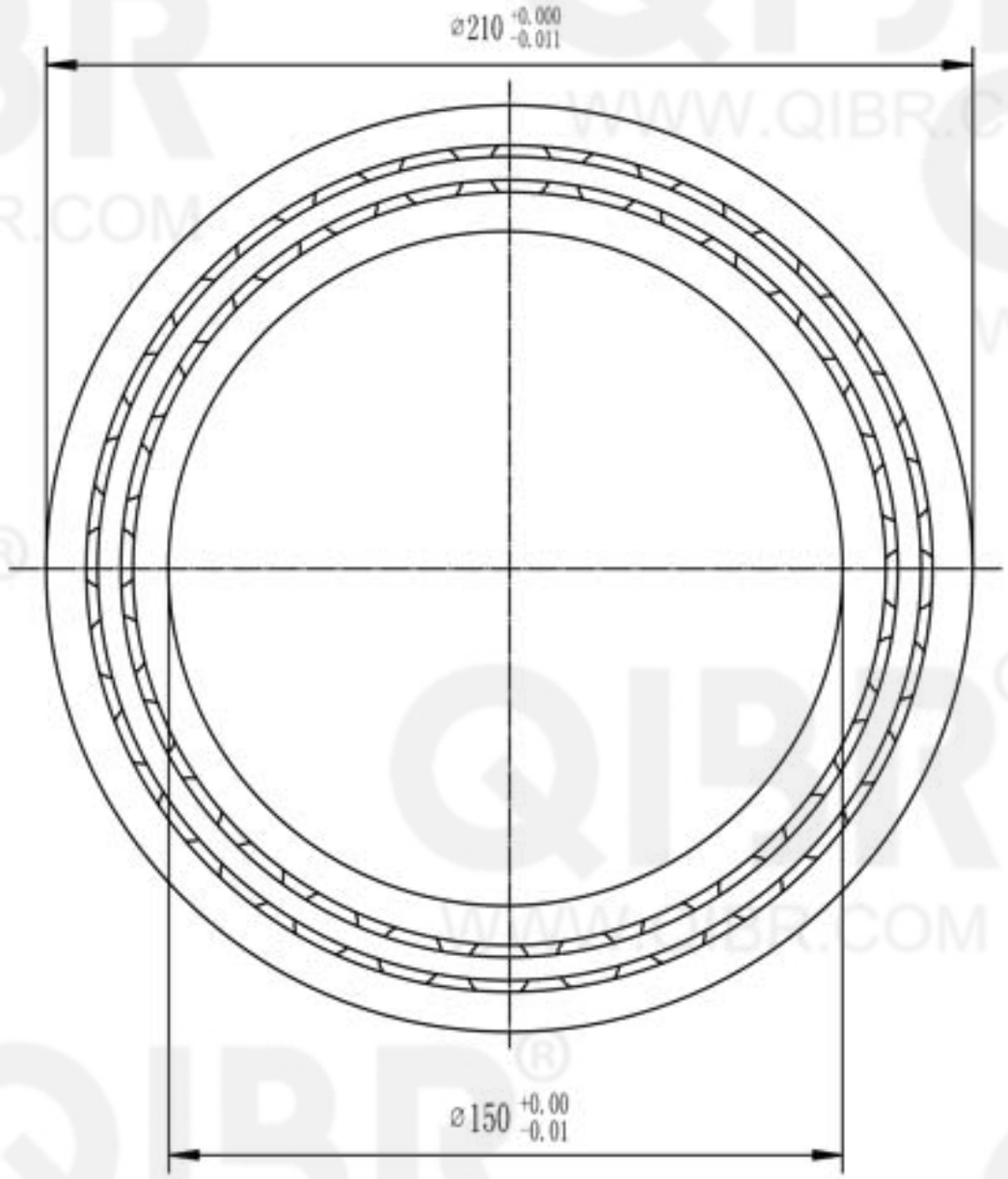


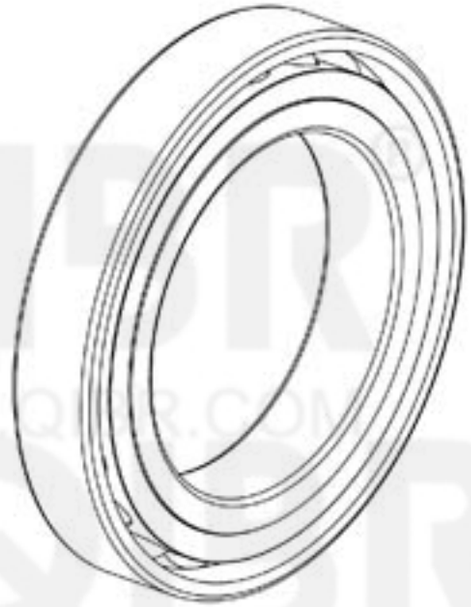

QIBR® BEARINGS

LUOYANG QIBR BEARING CO., LTD

http://www.QIBR.com

| | |
|---|---|
| ANGULAR CONTACT BALL BEARING | PART NUMBER Q150BNR19S |

QIBR® WWW.QIBR.COM