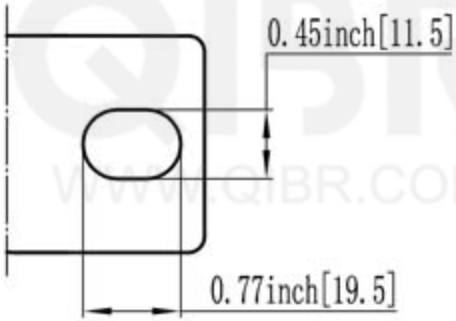

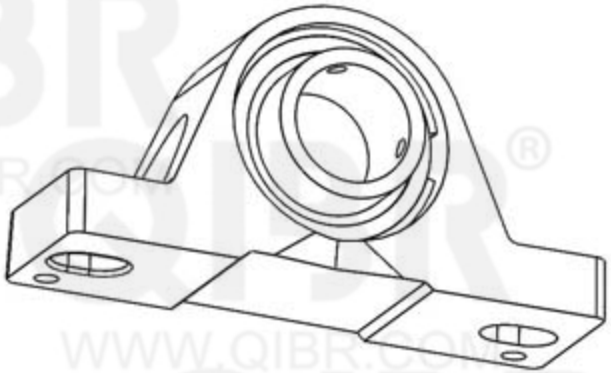

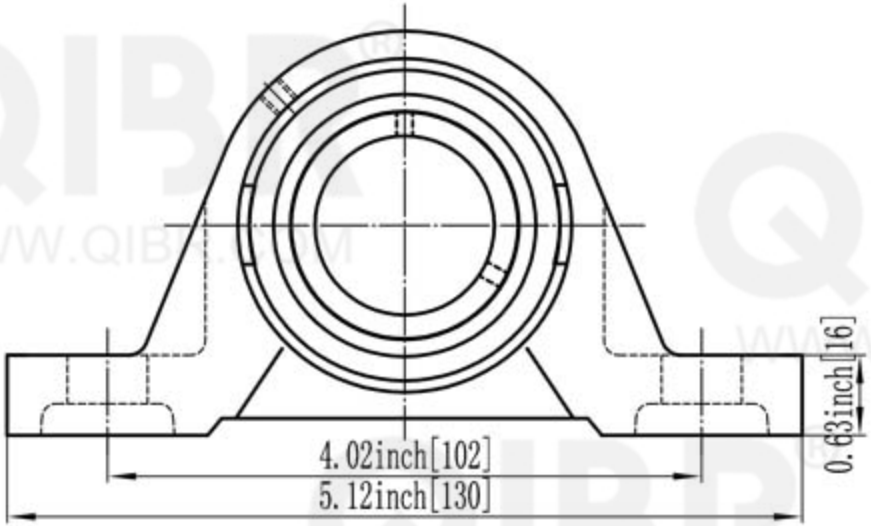

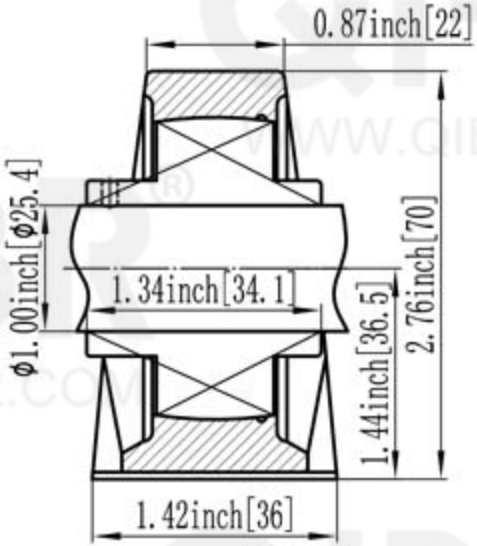

QIBR® BEARINGS	LUOYANG QIBR BEARING CO., LTD http://www.QIBR.com	
BEARING HOUSING	PART NUMBER	QSY 1. TF/AH

QIBR® WWW.QIBR.COM