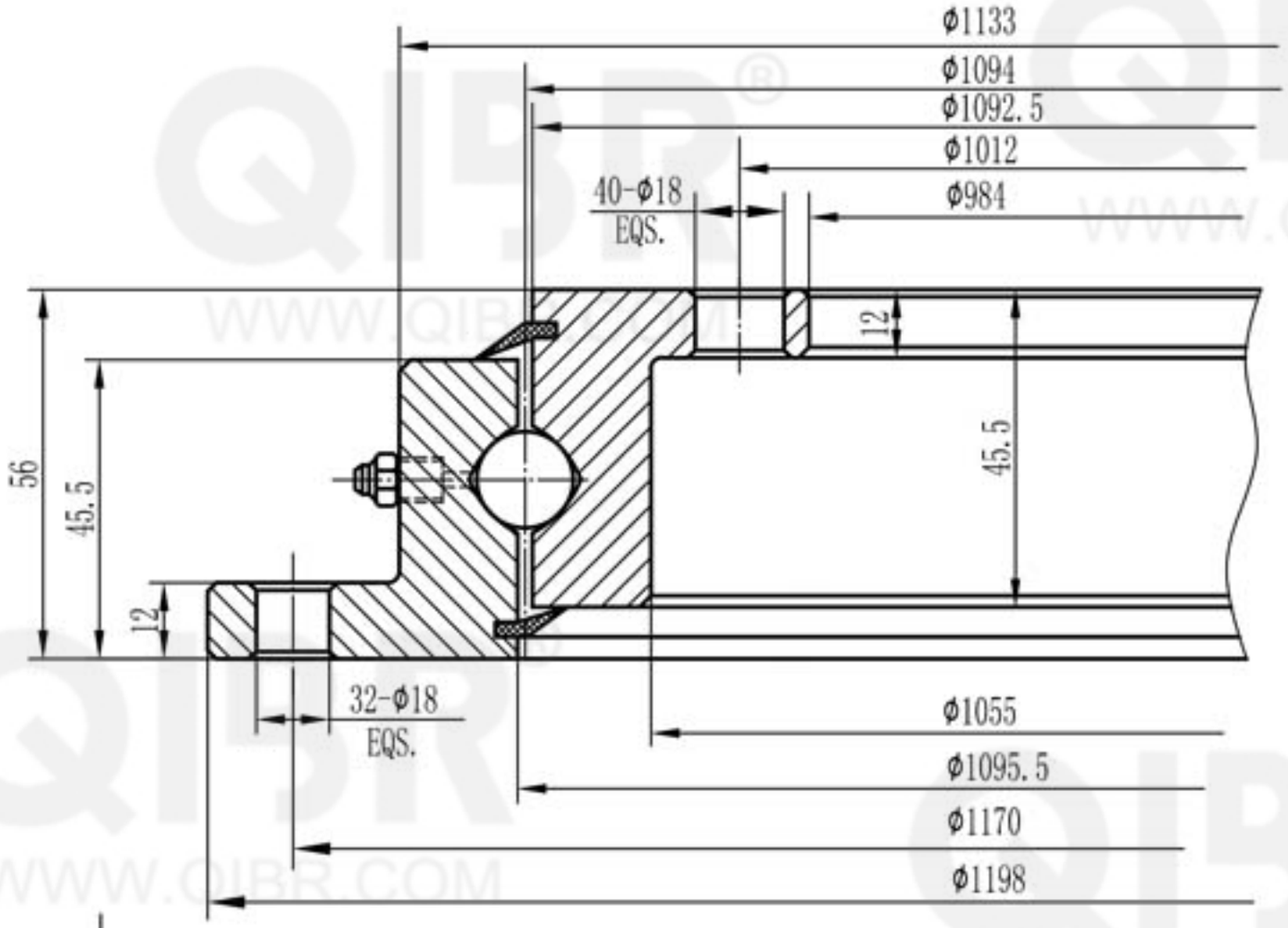

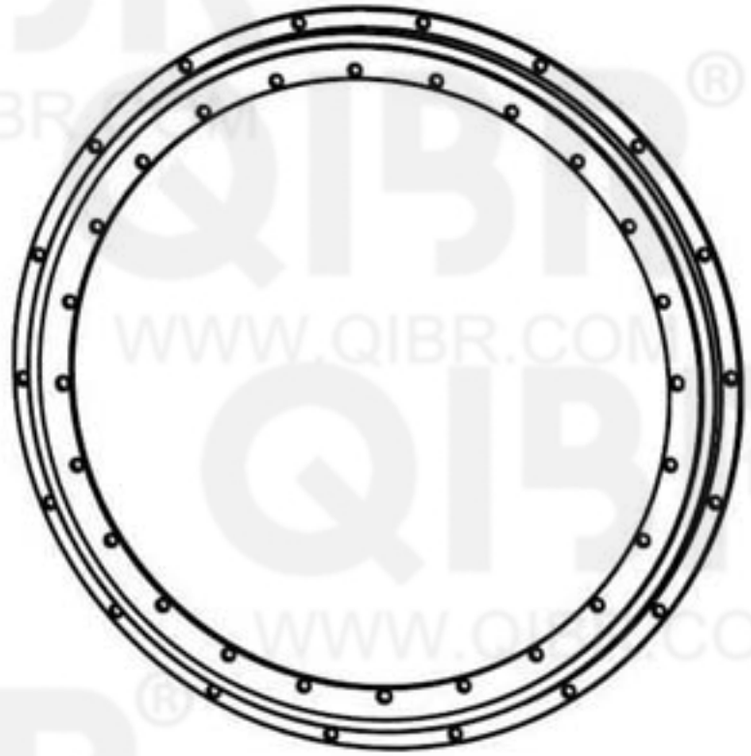

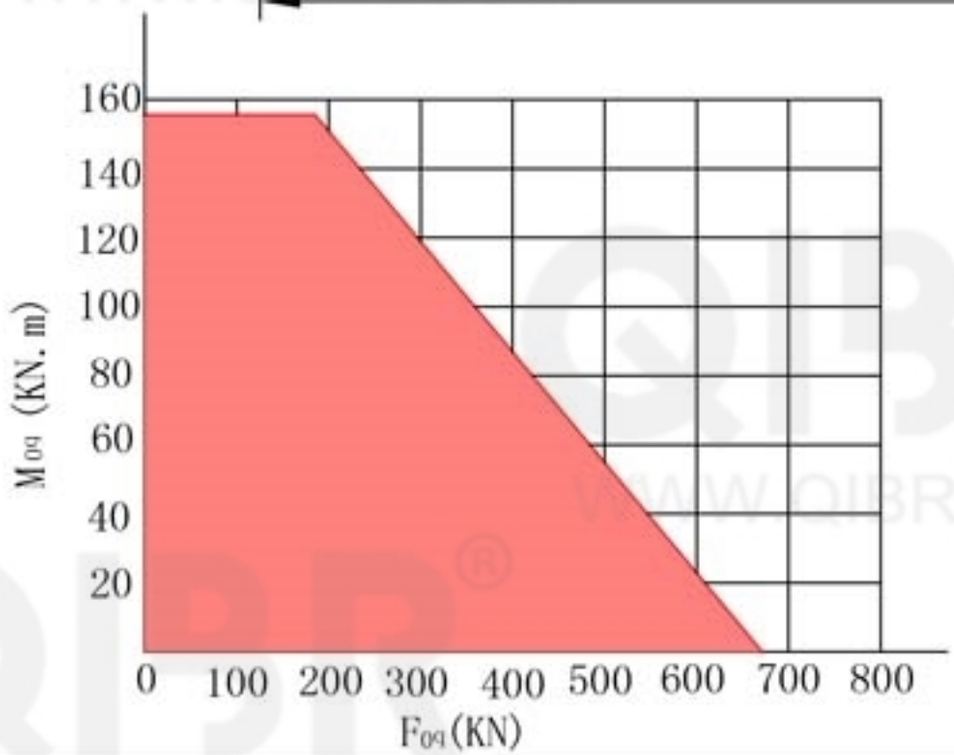

QIBR® BEARINGS

LUOYANG QIBR BEARING CO., LTD

http://www.QIBR.com

FOUR-POINT CONTACT BALL SLEWING BEARING

PART NUMBER Q230.20.1000.503 Typ 21/1200.0