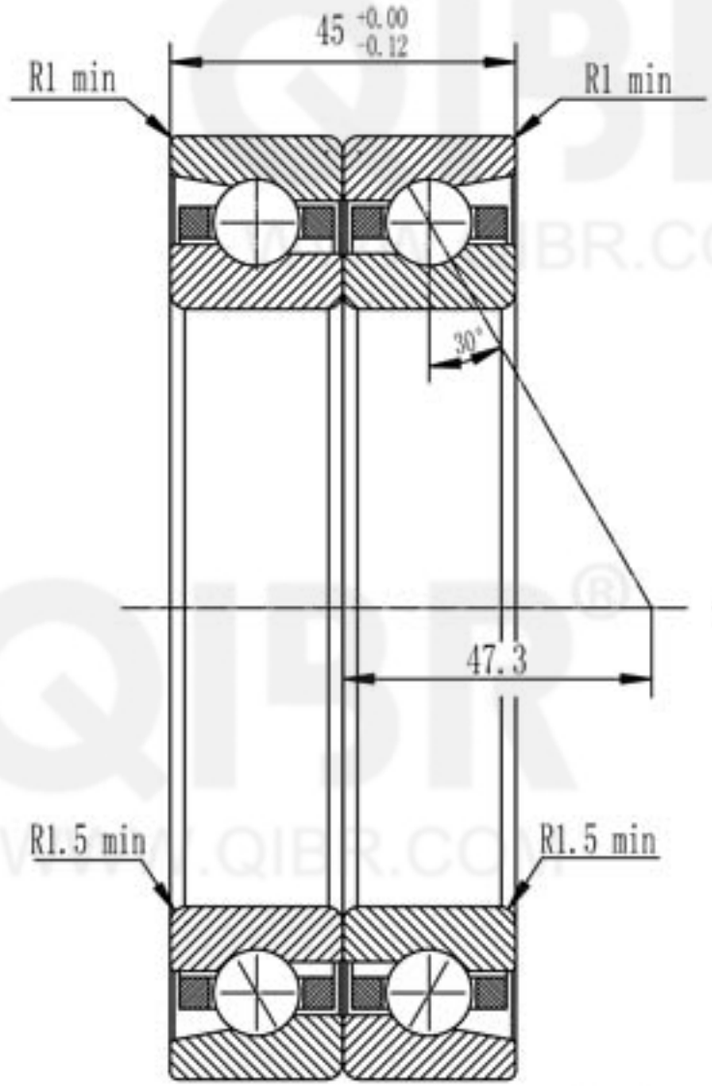

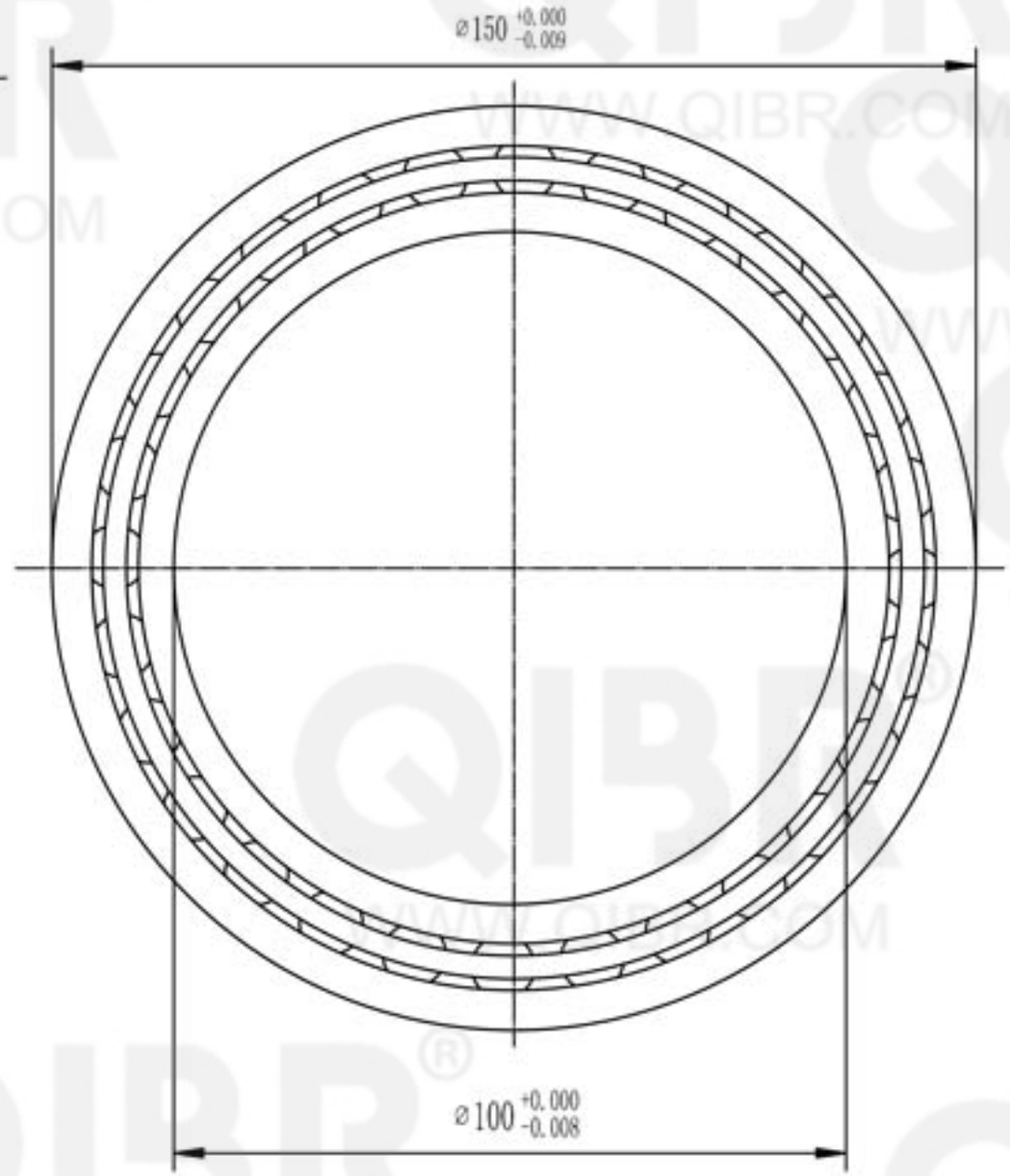

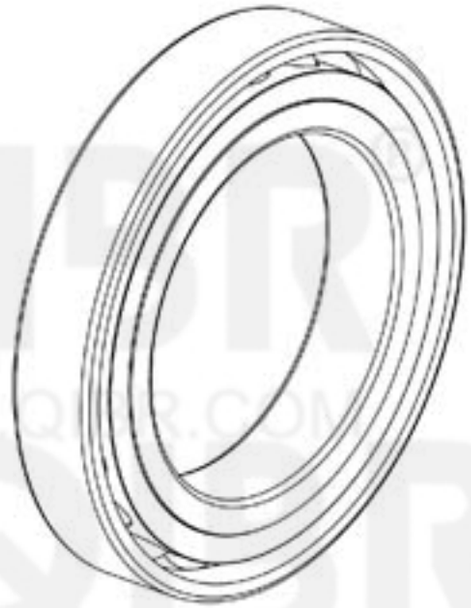

QIBR® BEARINGS

LUOYANG QIBR BEARING CO., LTD
http://www.QIBR.com

ANGULAR CONTACT BALL BEARING	PART NUMBER Q100BAR10S

QIBR® WWW.QIBR.COM