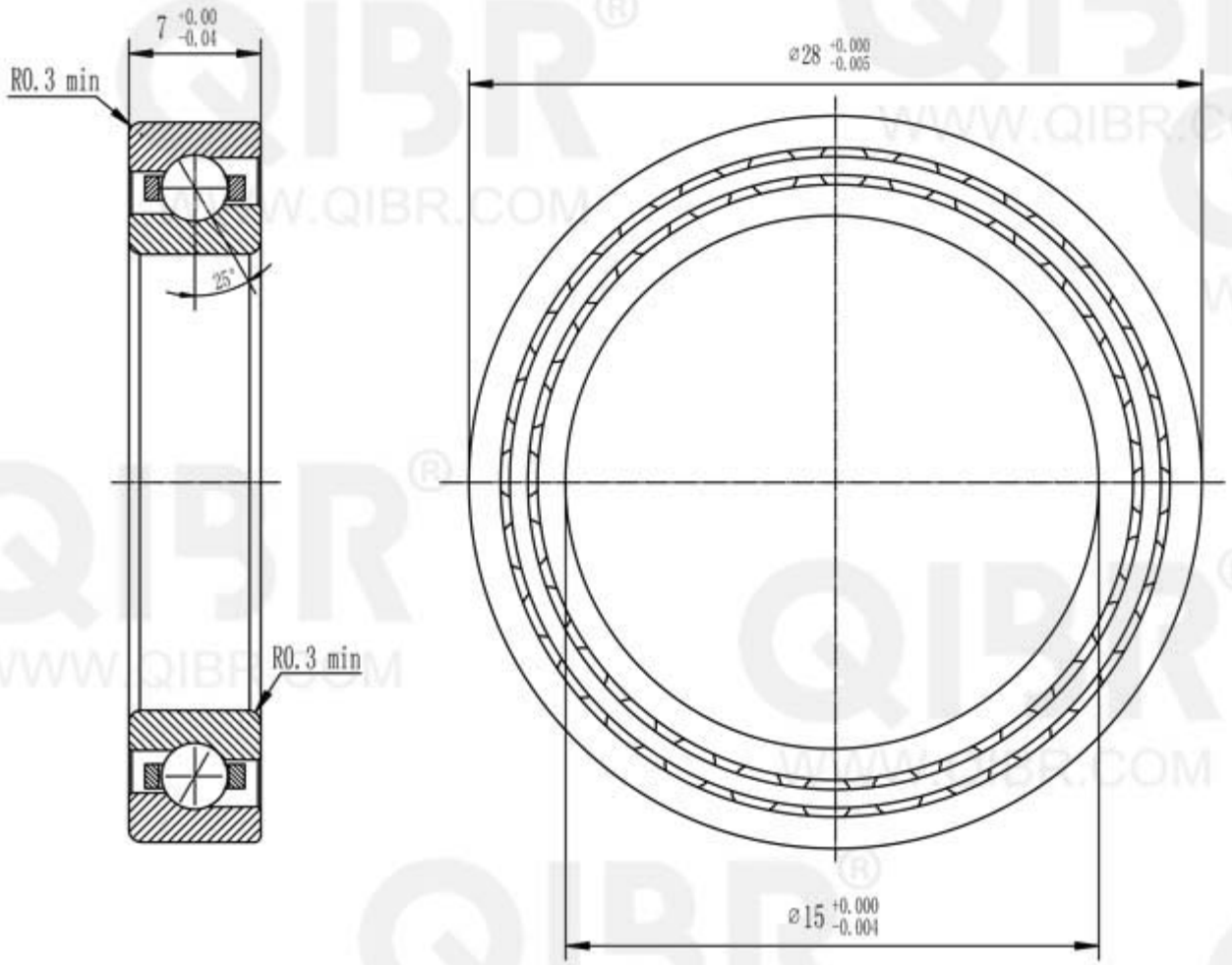

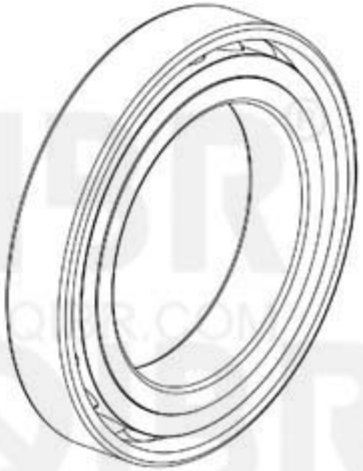

QIBR® BEARINGS

LUOYANG QIBR BEARING CO., LTD

http://www.QIBR.com

ANGULAR CONTACT BALL BEARING	PART NUMBER Q71902 ACE/P4A

QIBR® WWW.QIBR.COM