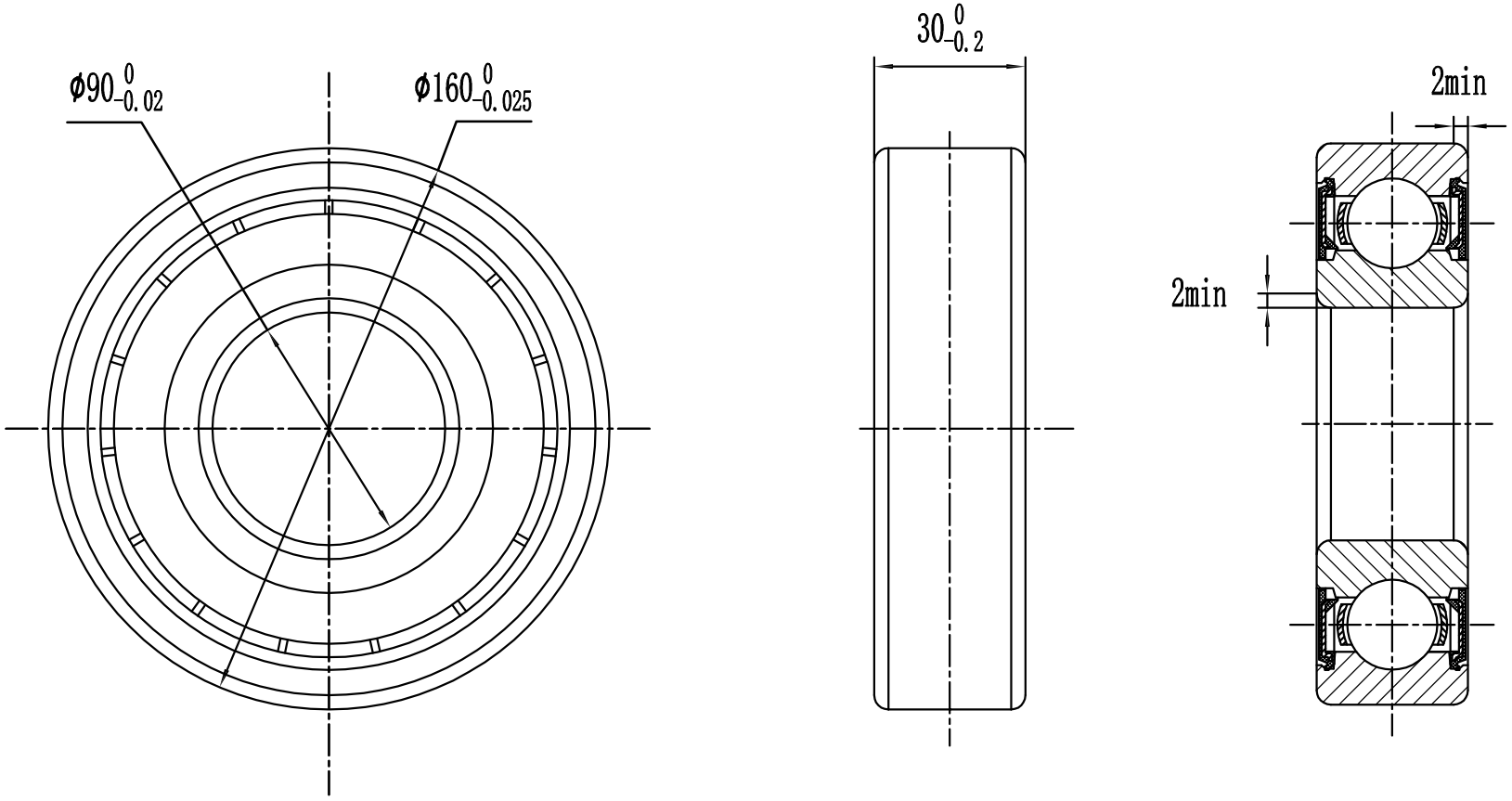

LUOYANG QIBR BEARING CO., LTD http://www.QIBR.com	
Deep Groove Ball Bearing	PART NUMBER 6218 2RZ