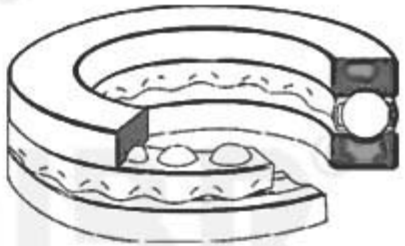

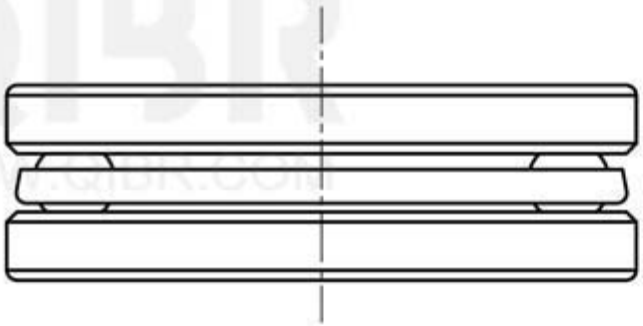

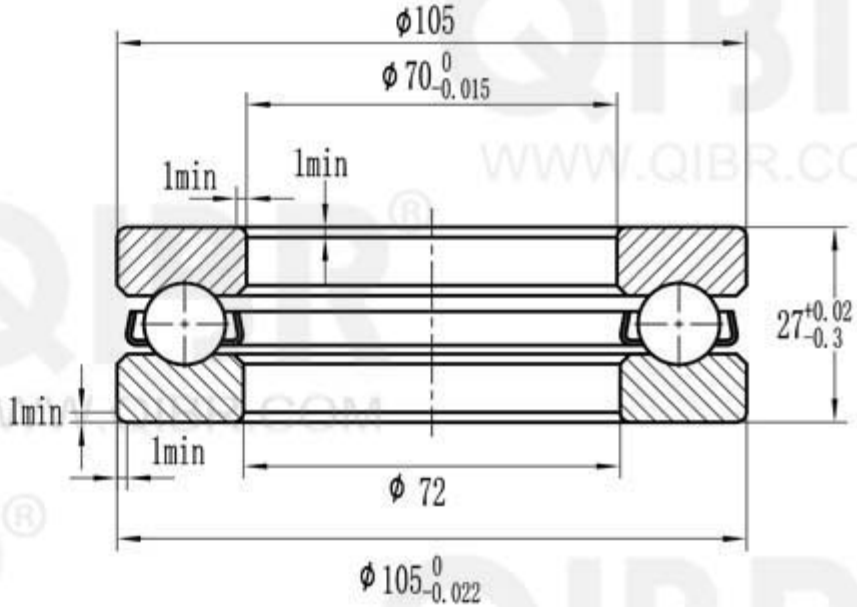

QIBR® BEARINGS LUOYANG QIBR BEARING CO., LTD http://www.QIBR.com	
Thrust Ball Bearing	PART NUMBER SS51214

QIBR® WWW.QIBR.COM