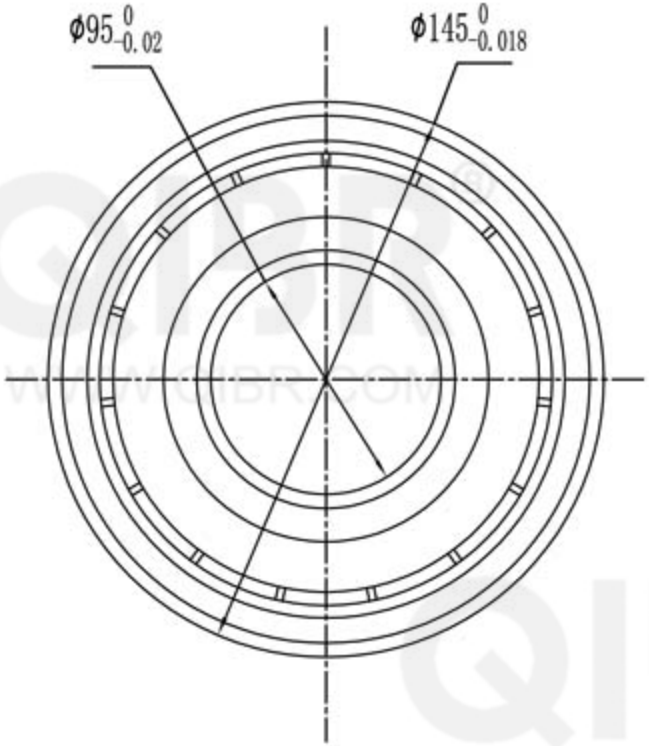

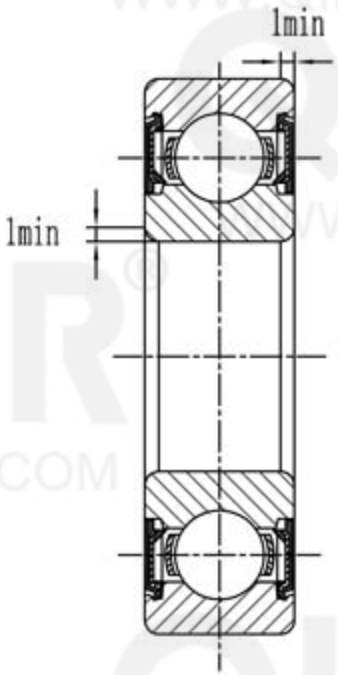

QIBR® BEARINGS LUOYANG QIBR BEARING CO., LTD http://www.QIBR.com	
Deep Groove Ball Bearing	PART NUMBER 16019 2RZ

QIBR® WWW.QIBR.COM