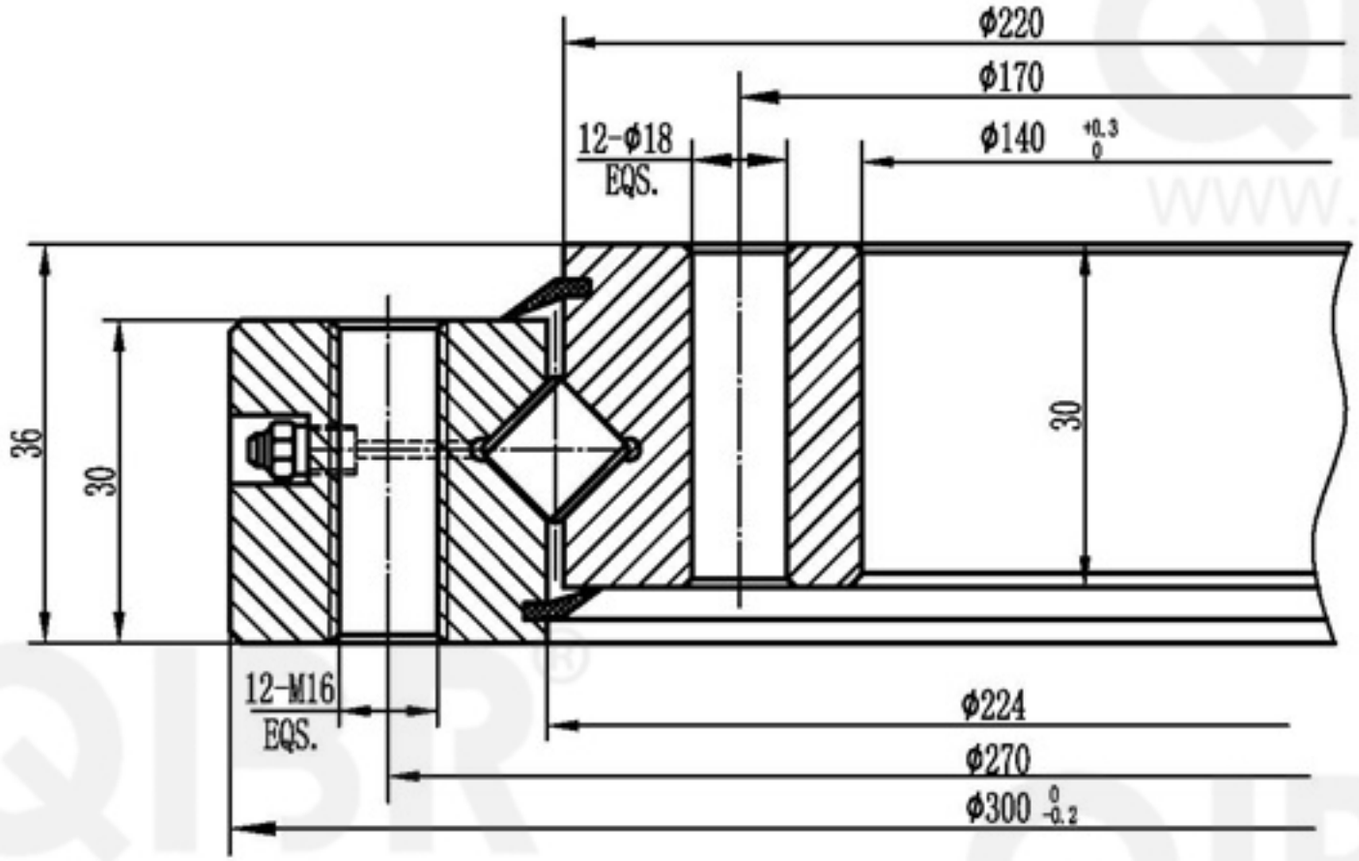

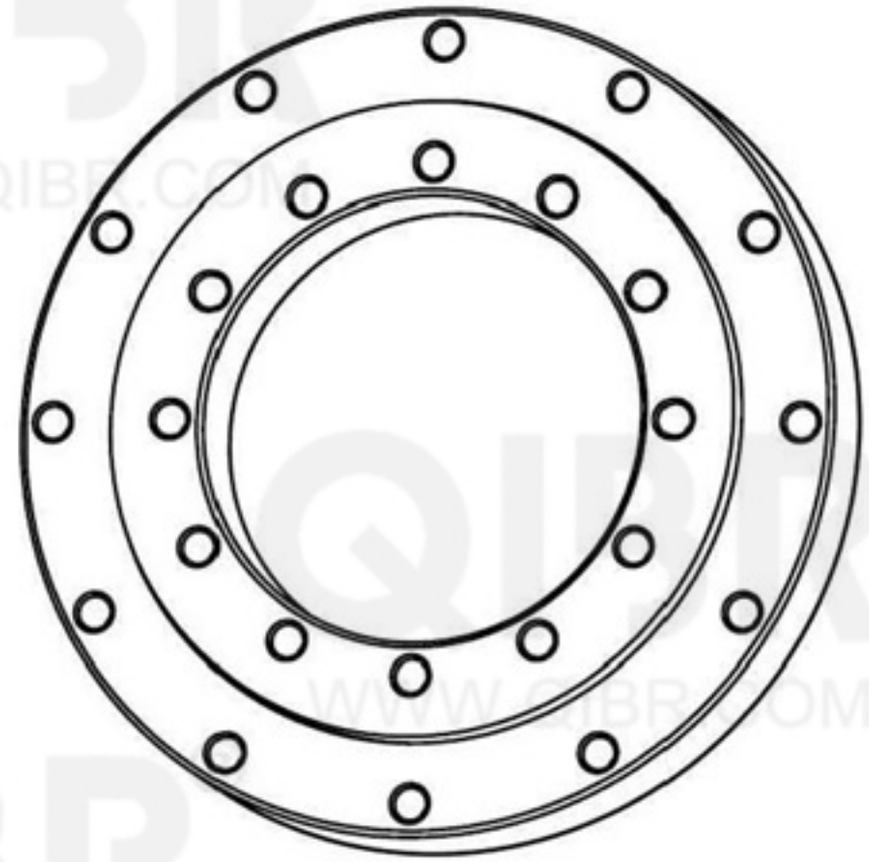

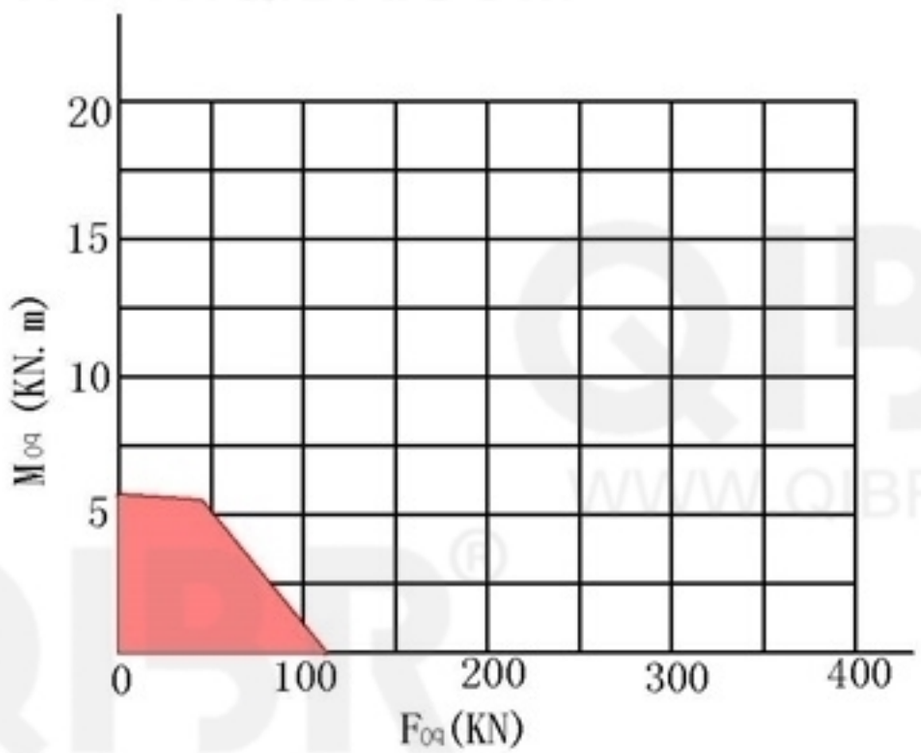

QIBR® BEARINGS

LUOYANG QIBR BEARING CO., LTD

http://www.QIBR.com

CROSSED CYLINDRICAL ROLLER SLEWING BEARING	PART NUMBER QXU12 0222

QIBR® WWW.QIBR.COM