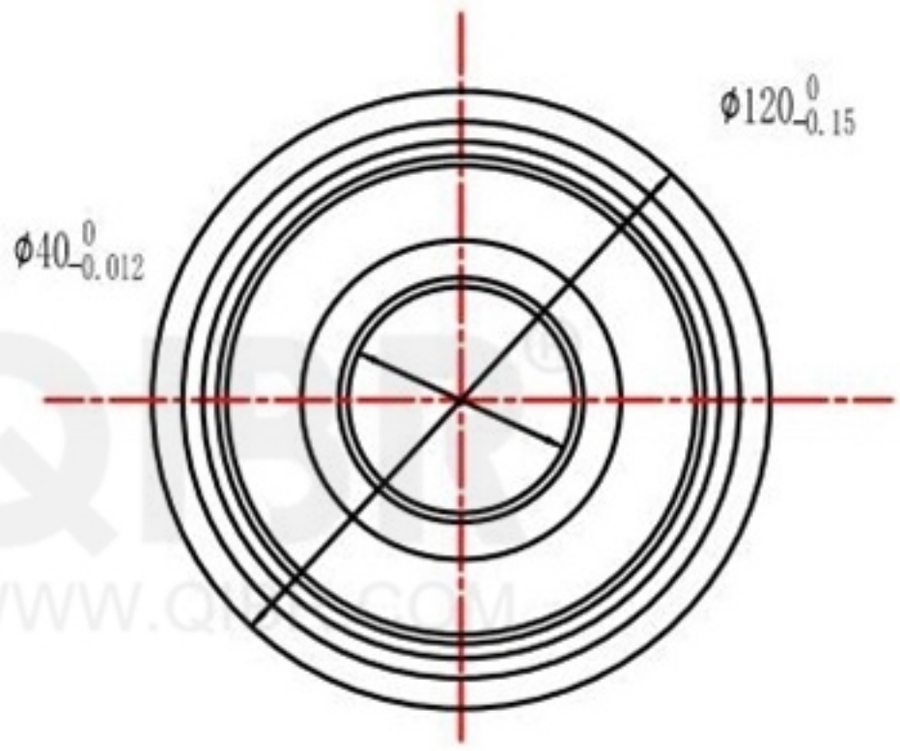

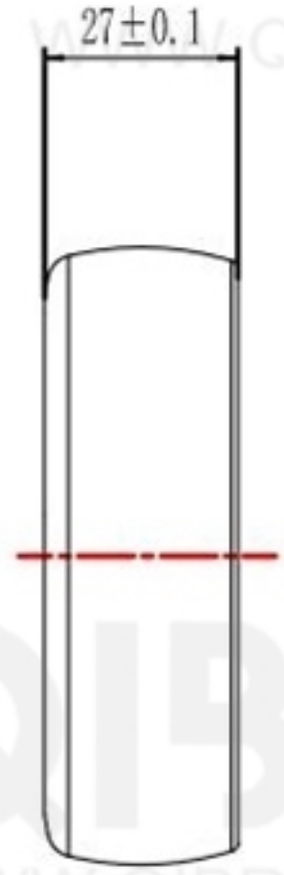

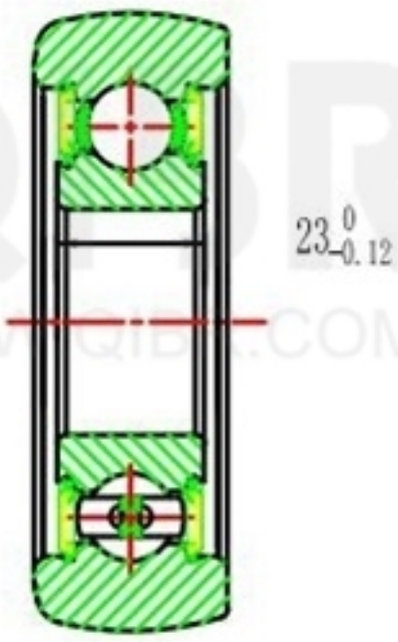

QIBR® BEARINGS LUOYANG QIBR BEARING CO., LTD http://www.QIBR.com	
Forklift Mast Roller	PART NUMBER QMR40R7-120

QIBR® WWW.QIBR.COM