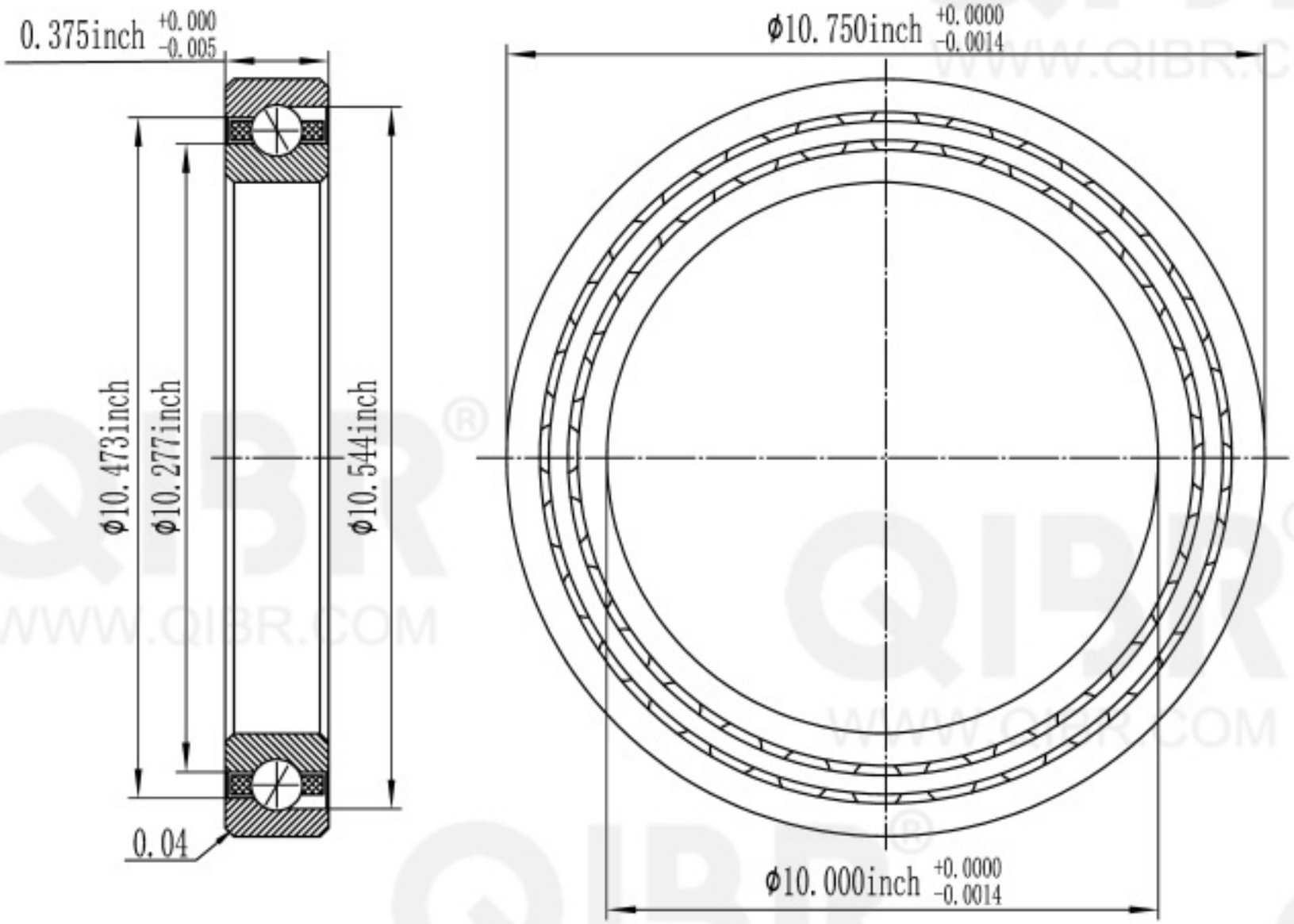

QIBR® BEARINGS	LUOYANG QIBR BEARING CO., LTD http://www.QIBR.com	
THIN SECTION BEARING	PART NUMBER	QKC100ARO

QIBR® WWW.QIBR.COM