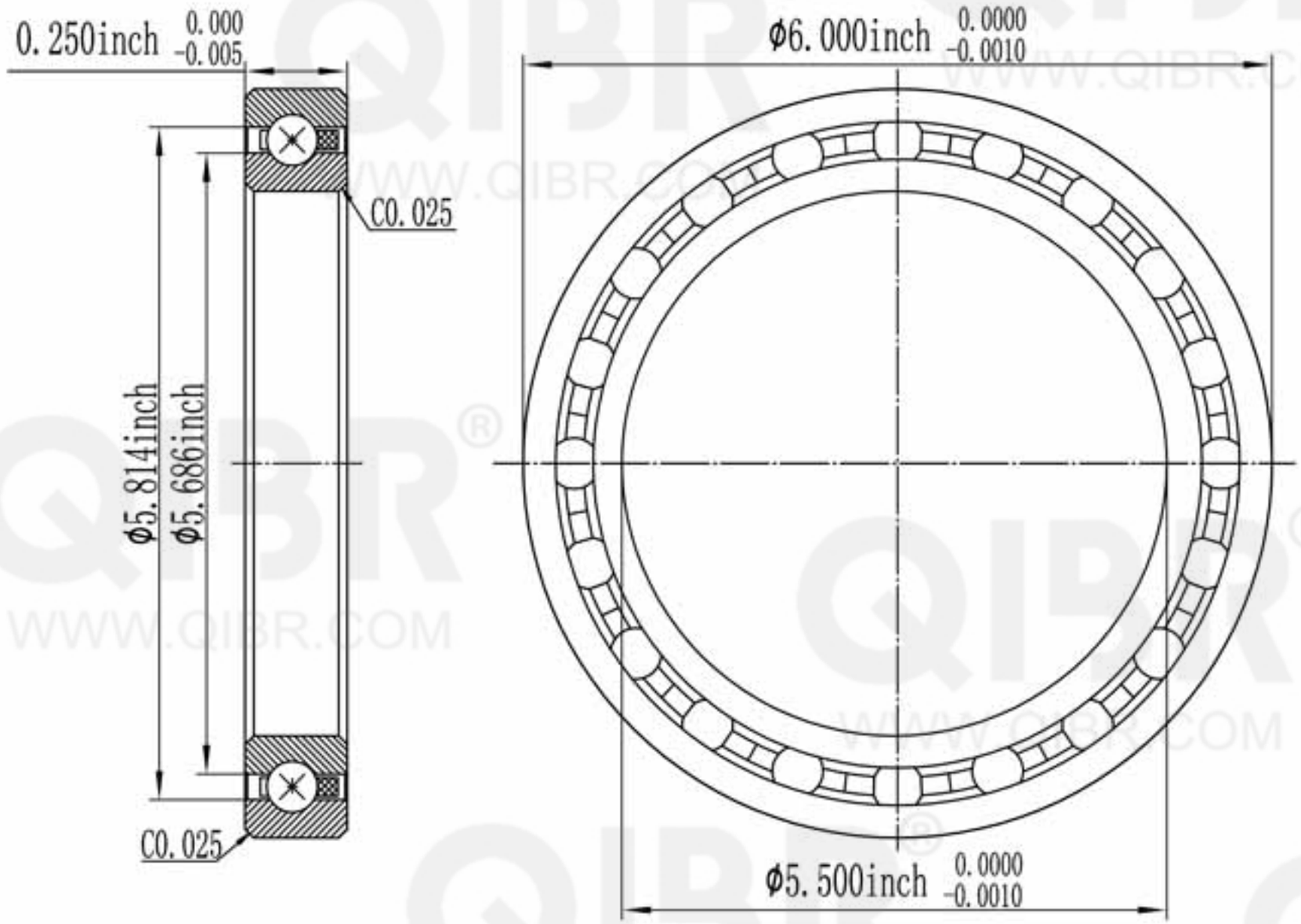

QIBR® BEARINGS

LUOYANG QIBR BEARING CO., LTD
http://www.QIBR.com

THIN SECTION FOUR-POINT CONTACT BALL BEARING	PART NUMBER QKA055XP0

QIBR® WWW.QIBR.COM