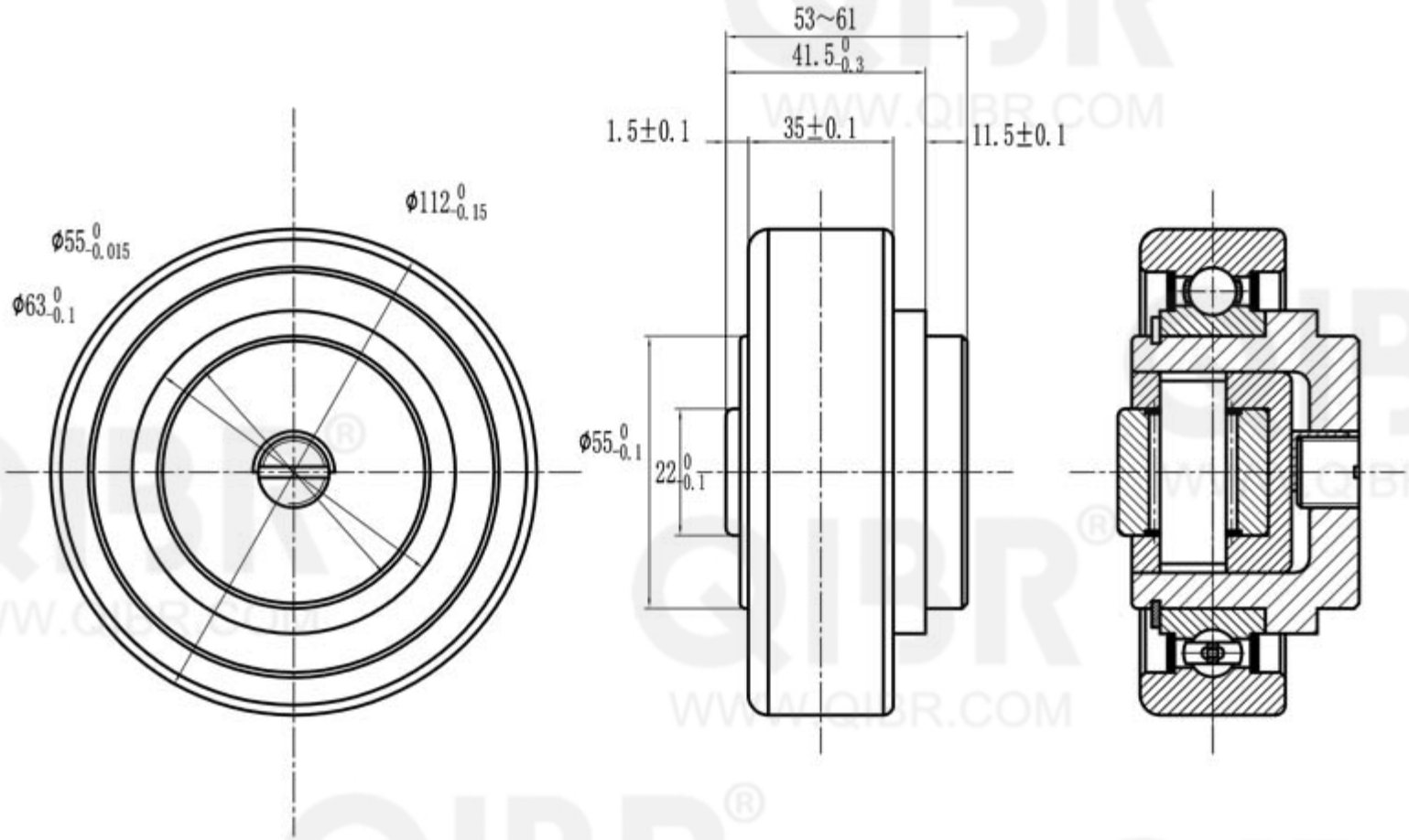

QIBR® BEARINGS LUOYANG QIBR BEARING CO., LTD http://www.QIBR.com	
Forklift Combined Bearing	PART NUMBER QBA112-2TS