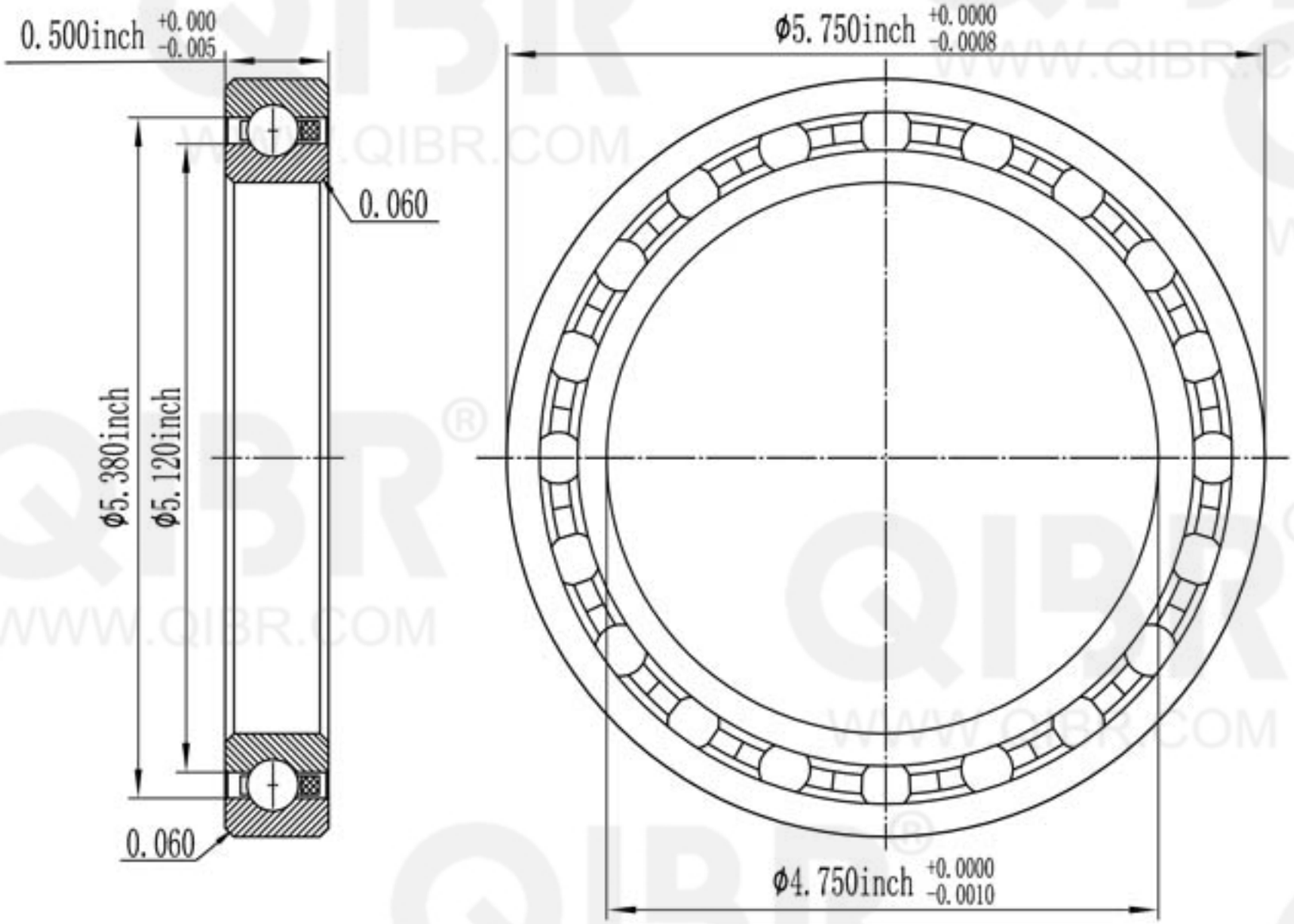

QIBR® BEARINGS

LUOYANG QIBR BEARING CO., LTD
http://www.QIBR.com

THIN SECTION DEEP GROOVE BALL BEARING	PART NUMBER QKD047CP0

QIBR® WWW.QIBR.COM