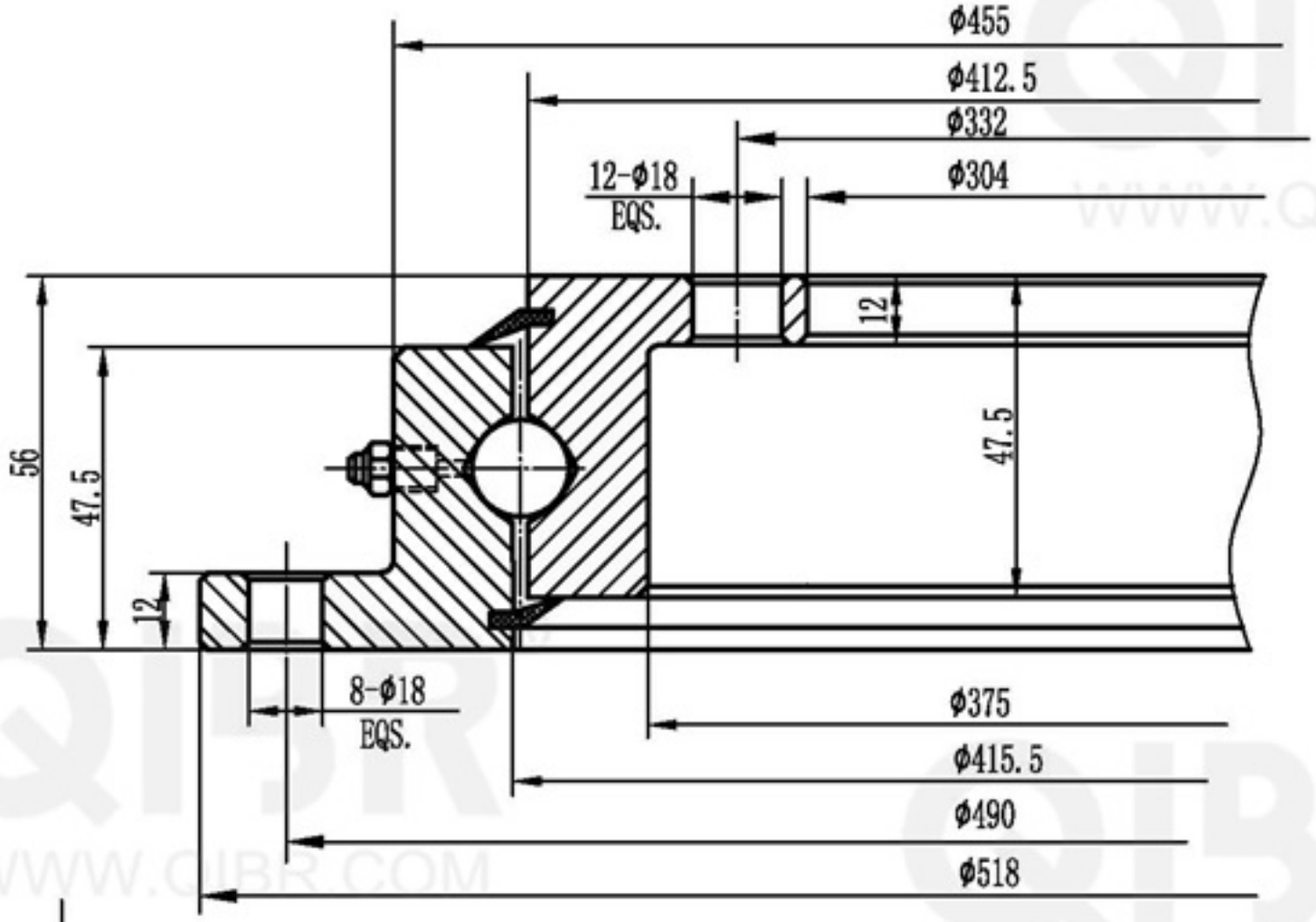

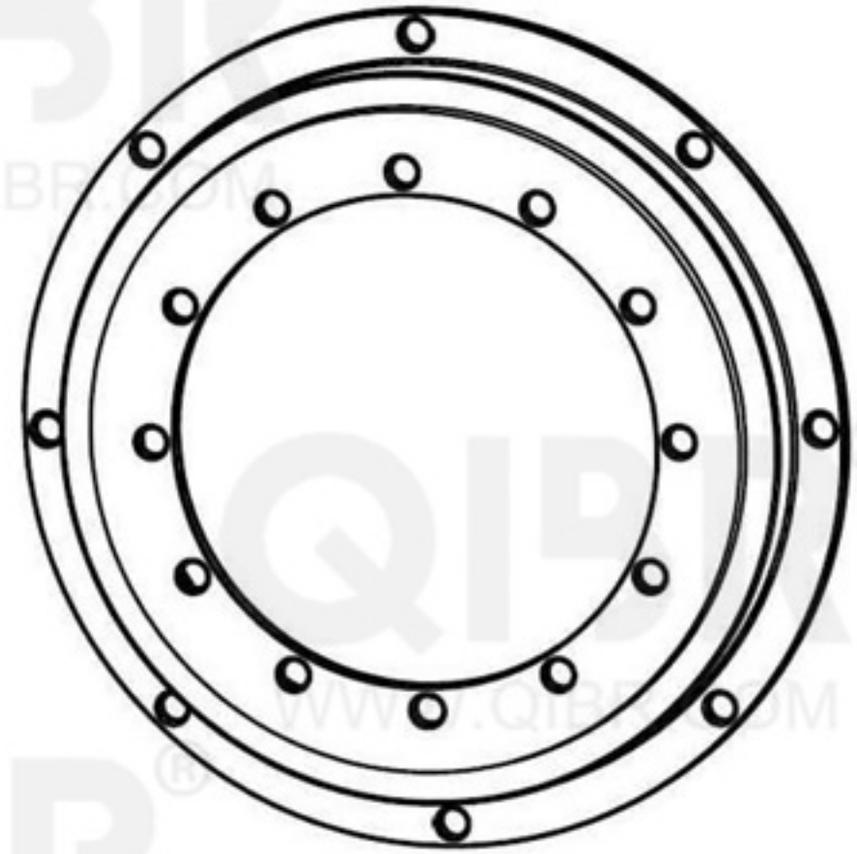

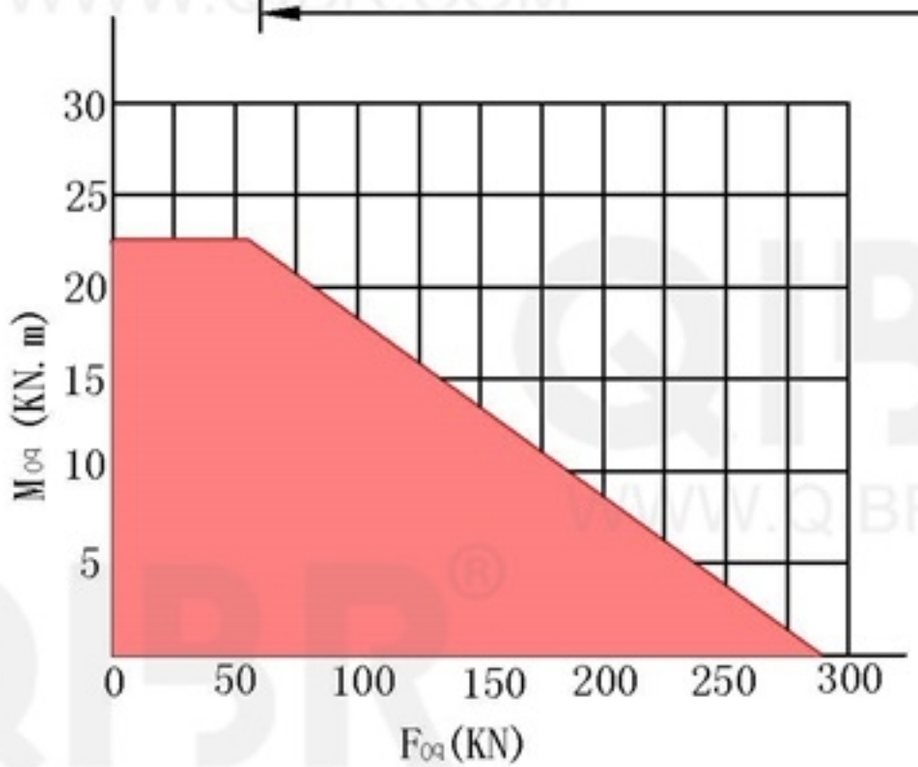

QIBR BEARINGS

LUOYANG QIBR BEARING CO., LTD

http://www.QIBR.com

FOUR-POINT CONTACT BALL SLEWING BEARING

PART NUMBER QVLU20 0414