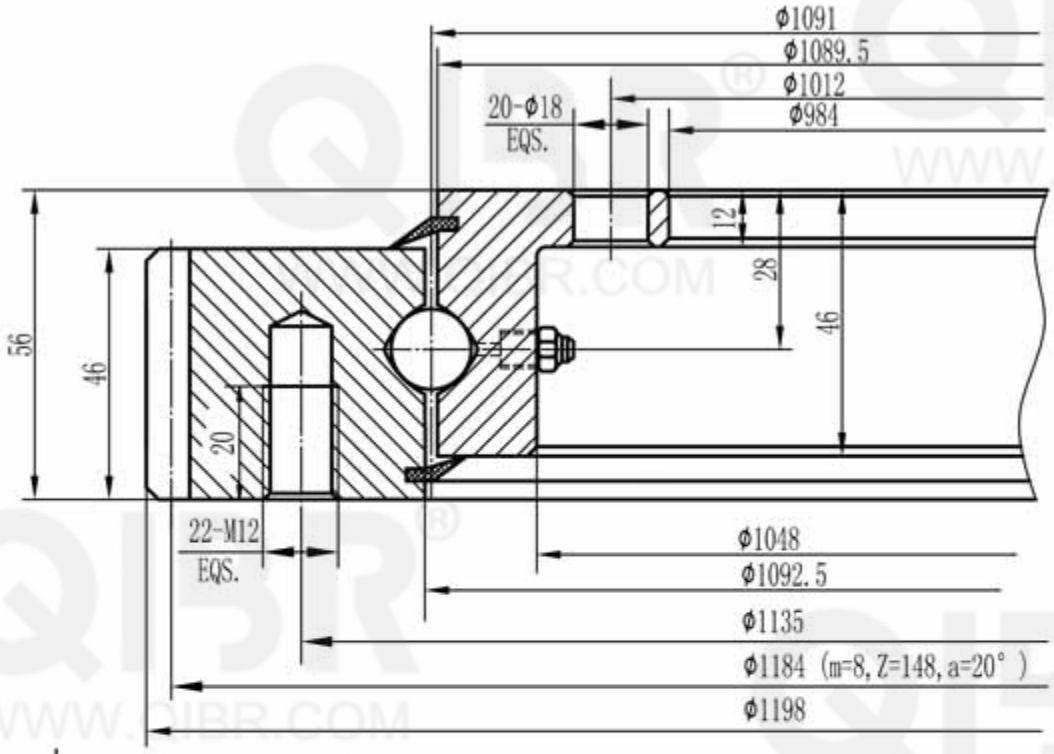

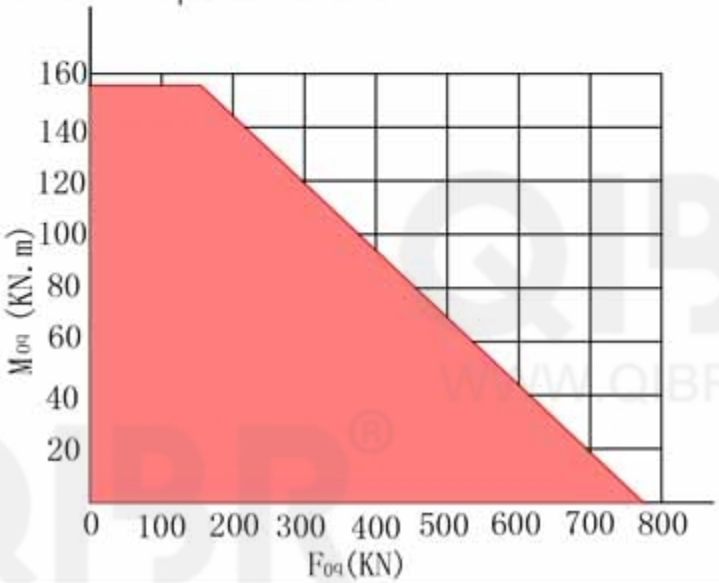


QIBR® BEARINGS

LUOYANG QIBR BEARING CO., LTD

http://www.QIBR.com

| | |
|---|---|
| FOUR-POINT CONTACT BALL SLEWING BEARING | PART NUMBER QRKS.21 1091 |