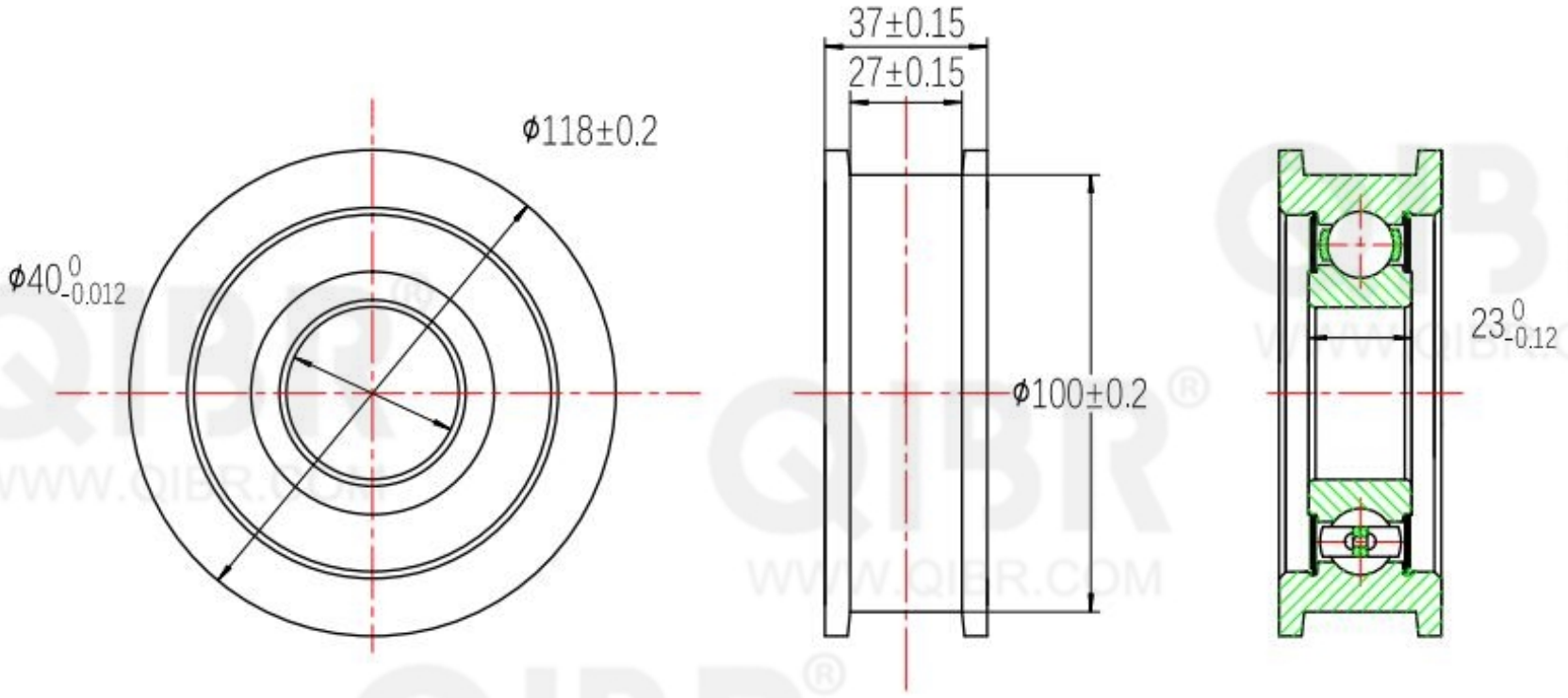

QIBR® BEARINGS	LUOYANG QIBR BEARING CO., LTD http://www.QIBR.com
Forklift Chain Pulley	PART NUMBER QIBR40B1-118a