INCH DIMENSION

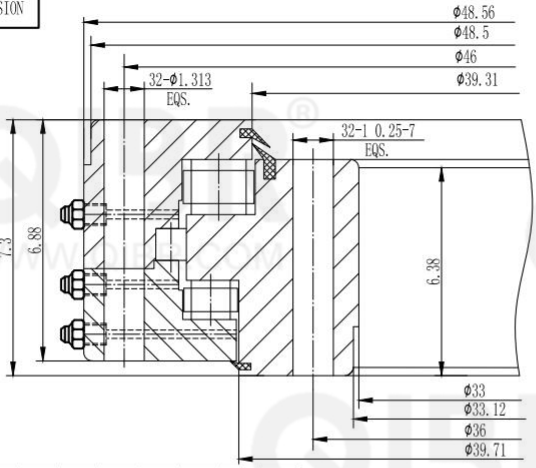

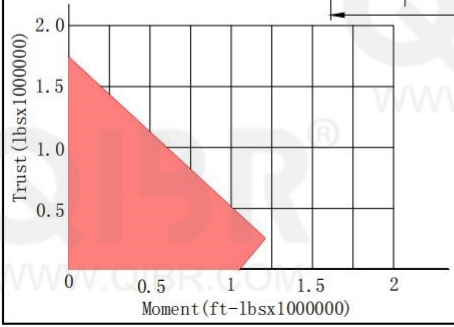

QIBR BEARINGS

LUOYANG QIBR BEARING CO., LTD
http://www.QIBR.com

FOUR-POINT CONTACT BALL SLEWING BEARING	PART NUMBER Q16349001

WWW.QIBR.COM